Seat No.: _____ *Enrolment No._____*

GUJARAT TECHNOLOGICAL UNIVERSITY

BE- VIIth SEMESTER–EXAMINATION – MAY/JUNE- 2012

Subject code: 171903 **Date: 09/06/2012**

Subject Name: Computer Integrated Manufacturing

Time: 02:30 pm – 05:00 pm **Total Marks: 70**

Instructions:

1. **Attempt all questions.**
2. **Make suitable assumptions wherever necessary.**
3. **Figures to the right indicate full marks.**

Q.1 **(a)** What are the objectives of CIM? Which major functional areas of the manufacturing enterprise considered for achieving CIM objectives? What are the benefits of CIM? **07**

(b) (i) Explain why recirculating ballscrews are used in NC/CNC machine tools. **03**

(ii) Explain the axes designation rules for machine tools employing rotating tools. Sketch a vertical machining center and designate its axes. **04**

Q.2 **(a)** Write a manual part program for turning a job shown in figure 1. The raw material is M.S. bar of size ϕ 90mm x112 mm long. The sequence of operations to be performed and relevant machining parameters are given in the table below. **07**

Op. No.	Operation	Tool No.	Feed rate (mm/rev)	Speed
10	Facing	01	0.1	180 m/min
20	Rough turning (use canned cycle)	02	0.2	700 rpm
30	Finish turning	02	0.1	180 m/min

Show the part zero and state the canned cycle used for rough turning.

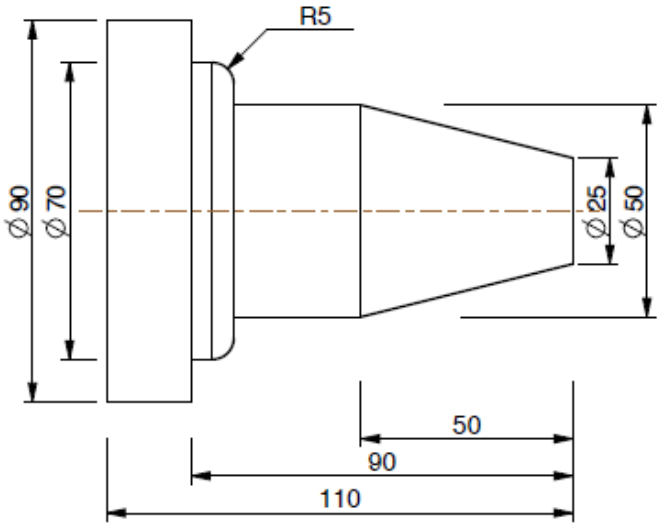

Figure 1 All dimensions are in mm

(b) Write a manual part program for profile milling and hole drilling using a machining center. Show the part zero. **07**

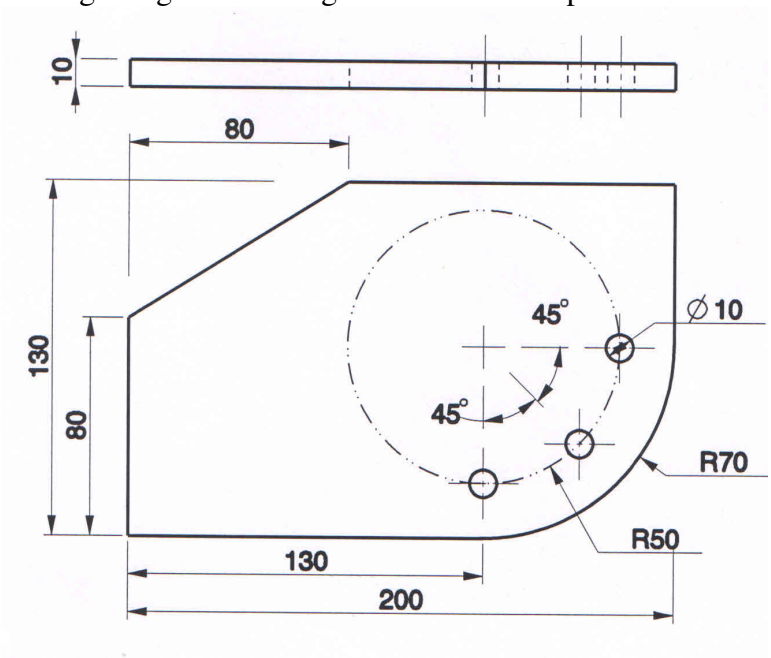

Figure 2 All dimensions are in mm

OR

(b) Write an APT program for profile milling a component shown in figure 3. Thickness of part is 10 mm. Cutter diameter 15 mm and length 15 mm. **07**

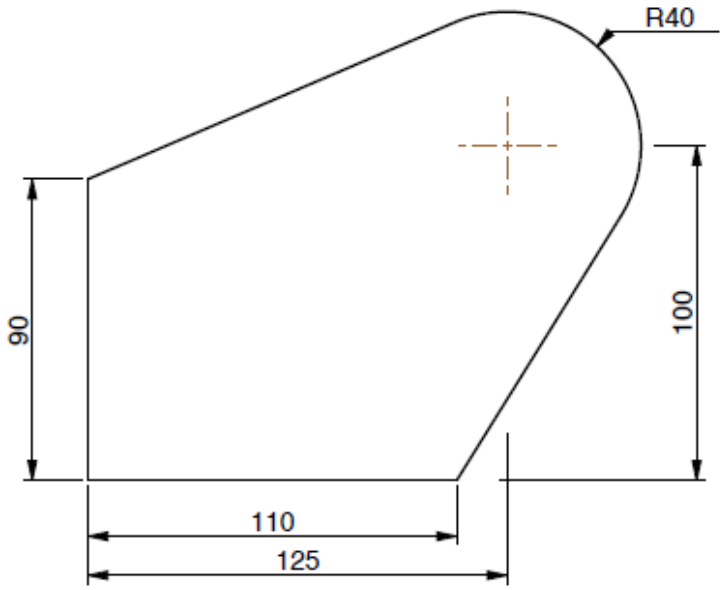

Figure 3 All dimensions are in mm

Q.3 **(a)** What is Group Technology? What are the advantages of GT in manufacturing? **07**

(b) Explain the variant type CAPP system. State the benefits and limitations of variant type CAPP systems. **07**

OR

Q.3 **(a)** Explain following with reference to Group Technology: **07**
(i) Coding structures in GT (ii) Composite part

(b) What are the major functions of process planning? What are the main problems associated with manual process planning? **07**

Q.4 **(a)** Enlist and explain different elements of a robot. **07**

(b) Sketch and explain cylindrical and polar configurations of industrial robots showing work envelope. **07**

OR

Q.4 **(a)** Explain on-line and off-line programming methods of robots. State advantages and disadvantages of each. **07**

(b) Discuss the concept of CIM wheel and explain the importance of integrating the enterprise included therein. **07**

Q.5 **(a)** Product P is assembled out of 2 units of S1 and 1 unit of S2. Both S1 and S2 are subassemblies. S1 is made of 2 unit of C1 and 2 units of C3. S2 is made of 1 units of C1 and 2 unit of C2. Draw product tree structure diagram. The Master production schedule specifies that 80 and 100 units of P are to be delivered in week 8 and 9 respectively. The lead times for each item is given below: **07**

Item	P	S1	S2	C1	C2	C3
Lead times in weeks	1	2	2	2	3	2
Units on hand					60	80

Prepare the MRP output for all items.

(b) What is FMS? Explain the basic components of FMS. **07**

OR

Q.5 **(a)** Explain the role of CMM in Computer Aided Quality Control. What are different elements of a CMM? **07**

(b) What is an AGV? What are different types of AGVs? What are the benefits of using AGVs? **07**

****