Seat No.: _____ Enrolment No._____

GUJARAT TECHNOLOGICAL UNIVERSITY

BE SEMESTER 1st / 2nd (OLD) EXAMINATION WINTER 2016

Subject Code: 110010 **Date:02/02/2017**

Subject Name: Mechanics of Solids

Time:10:30 AM TO 1:00 PM **Total Marks: 70**

Instructions:

1. **Attempt any five questions.**
2. **Make suitable assumptions wherever necessary.**
3. **Figures to the right indicate full marks.**

Q.1	**(a)**	Explain in brief: (i) Equilibrant, (ii) Resolution of force, (iii) Law of Parallelogram	**06**
	(b)	Determine the resultant of a force system shown in *Fig.1* by analytical method and check the answer by law of Polygon.	**08**
Q.2	**(a)**	i) State Varigon's theorem and give the application of theorem.	**03**
		ii) Explain the conditions of equilibrium for different types of force systems.	**04**
	(b)	Two buckets are suspended by a flexible rope as shown in *Fig.2*. The weight of bucket *A* is *100 N*, if the system is in equilibrium, find the weight of bucket *B* and force in each part of the rope.	**07**
Q.3	**(a)**	Determine the resultant of a force system shown in *Fig.3* and locate the resultant with respect to point *A*.	**07**
	(b)	Find the reactions at supports for beam the shown in *Fig.4*.	**07**
Q.4	**(a)**	Draw the shear force and bending moment diagram for the beam shown in *Fig.5* and determine the maximum bending moment.	**07**
	(b)	Find out centroid of the Lamina shown in *Fig.6.*	**07**
Q.5	**(a)**	A stepped bar made of Copper, Aluminum and steel part as shown in *Fig.7*. Find stress in each part and total change in length of the bar.	**07**
	(b)	Determine moment of inertia of section shown in *Fig.6* about base.	**07**
Q.6	**(a)**	i) State Pappu's – Guildinu's theorems.	**03**
		ii) A steel rod of *50 mm* diameter and *3 m* in length is subjected to rise of 50° C temperature. Determine the free expansion of rod. If the free expansion is prevented, find the stress in the rod. Take $Es = 2 \times 10^5$ *MPa* and $\alpha = 12 \times 10^{-6} / {}^oC$.	**04**
	(b)	Draw shear stress distribution diagram of a T- Section beam shown in *Fig.8*, if it is subjected to shear force of *120 kN*.	**07**
Q.7	**(a)**	A uniform ladder of weight *300 N* and length *6 m* is placed against a vertical wall such that it makes an inclination of 60° with floor. A person of weight *800*	**07**

N climbs the ladder. At what position of the person the ladder will start to slip. Take coefficient of friction is *0.2* for wall and ladder and *0.25* for floor and ladder.

(b) At a point in a strained material two mutually perpendicular tensile stress of *50 N/mm²* and *80 N/mm²* and shear stress *20 N/mm²* are acting as shown in *Fig.9*. Find the values of principal stresses and position of principal planes. **07**

****

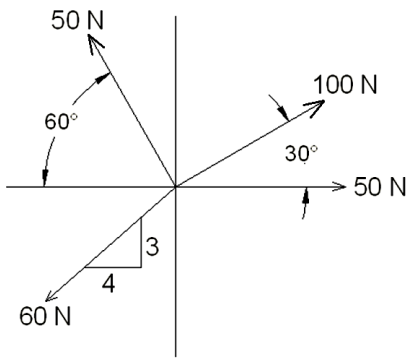

Fig.1 [Q-1(b)]

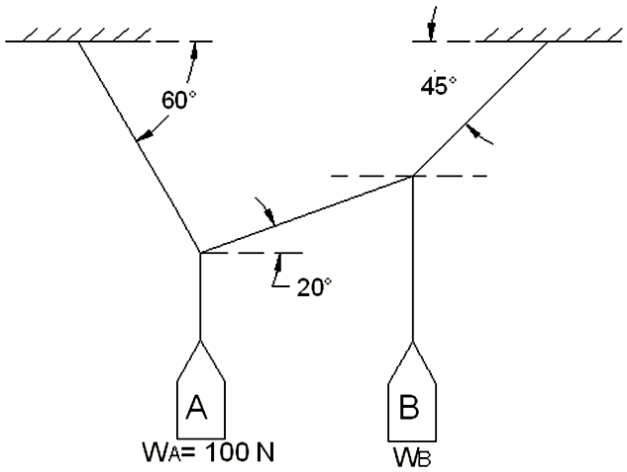

Fig.2 [Q-2(b)]

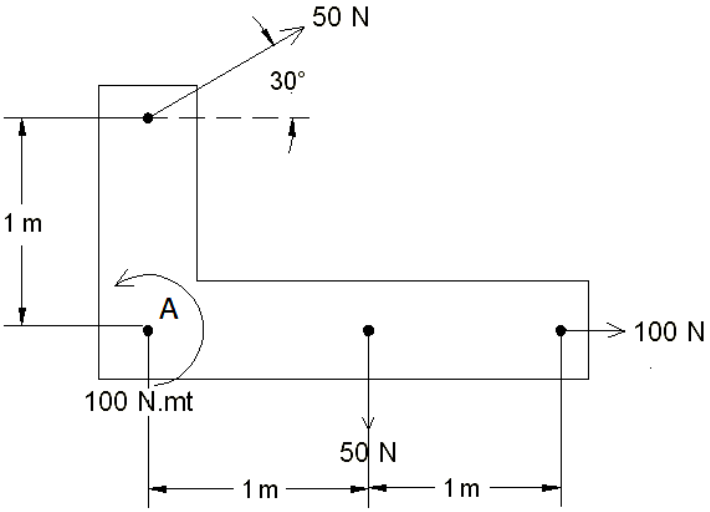

Fig.3 [Q-3(a)]

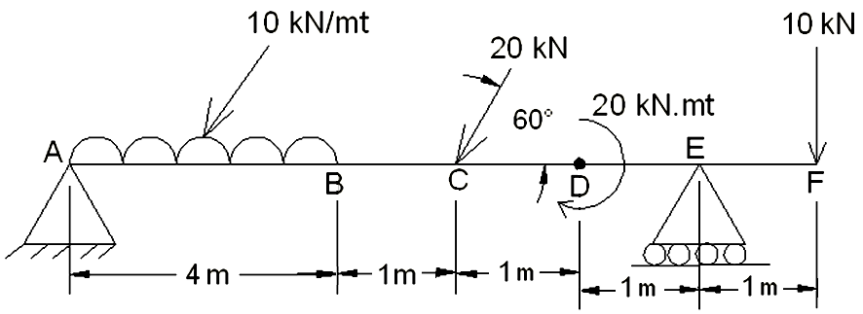

Fig.4 [Q-3(b)]

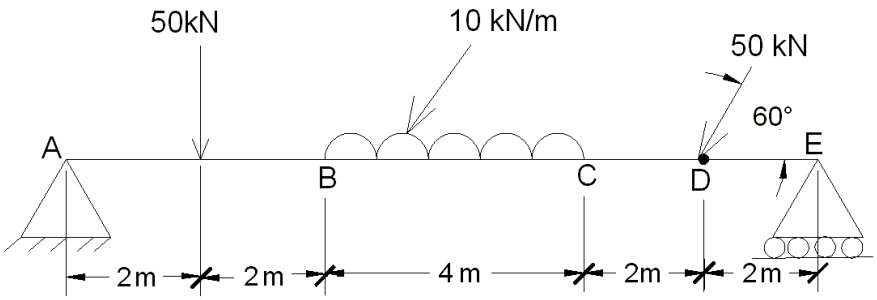

Fig.5 [Q-4(a)]

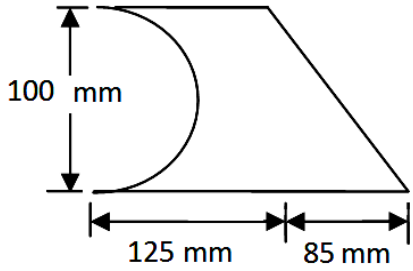

Fig.6 [Q-4(b) and Q-5(b)]

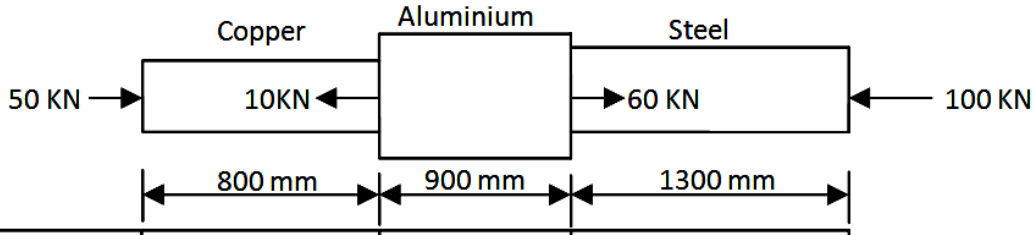

Diameter	25mm	75mm	40mm
E (GPa)	100	75	200

Fig.7 [Q-5(a)]

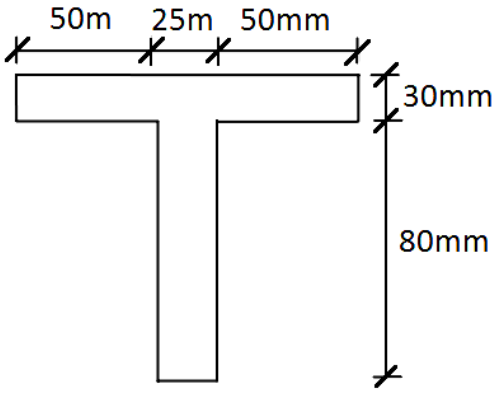

Fig.8 [Q-6(b)]

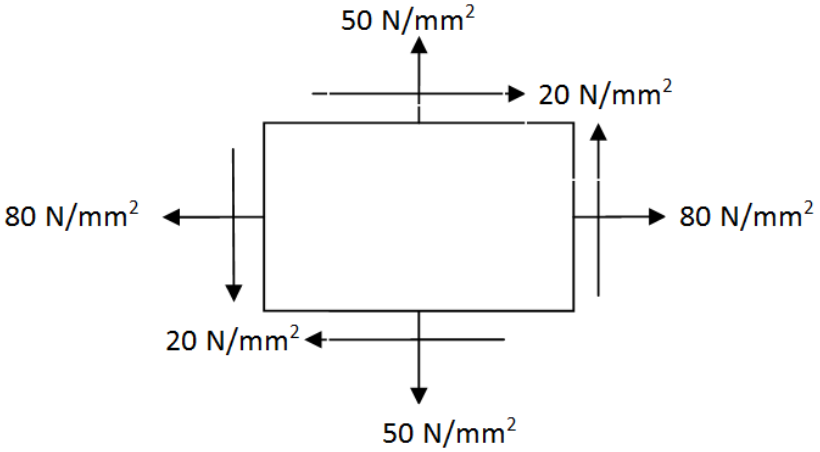

Fig.9 [Q-7(b)]