Seat No.: _____ Enrolment No._____

GUJARAT TECHNOLOGICAL UNIVERSITY
BE - SEMESTER– V • EXAMINATION – WINTER 2016

Subject Code: 151902 **Date: 30/11/2016**
Subject Name: Theory of Machines
Time: 02:30PM – 05:00PM **Total Marks: 70**

Instructions:

1. **Attempt all questions.**
2. **Make suitable assumptions wherever necessary.**
3. **Figures to the right indicate full marks.**

Q.1 **(a)** Explain following terms associated with a governor. **08**
1. Sensitivity 2. Controlling Force
3. Height of the Governor 4. Isochronism

(b) Derive the equation relating speed of the governor with the height of the governor for a Watt governor. **06**

Q.2 **(a)** Derive the equation of the stability of a four wheeler negotiating a turn. **07**

(b) Derive the equation of displacement, velocity and acceleration of a piston in terms of crank rotation. **07**

OR

(b) 1. Define and explain D'Alembert's principle with a suitable example. **02**
2. State application of the flywheel and differentiate between a flywheel and governor. **05**

Q.3 **(a)** The crank and connecting rod of a vertical petrol engine, running at 1800 rpm are 60 mm and 270 mm respectively. The diameter of the piston is 100 mm and the mass of the reciprocating parts is 1.2 kg. During the expansion stroke when the crank has turned 20° from the TDC, the gas pressure is 650 kN/m^2. Determine: (i) net force on the piston (ii) net load on the gudgeon pin (iii) thrust on the cylinder. **07**

(b) Explain the term "self locking" in brakes and derive the equation for the same for a band brake. **07**

OR

Q.3 **(a)** Enlist types of dynamometer and with the help of neat sketch explain working of rope brake dynamometer. **07**

(b) For an internal expanding shoe brake, derive the equation of braking torque. **07**

Q.4 **(a)** A double block brake as shown in Fig. 1, is set by a spring that produces a force of 3.5 kN. The brake drum diameter is 400 mm and the angle of contact for each block is 110°. If the coefficient of friction between block and the drum is 0.45, determine the maximum torque that can be absorbed. If the bearing pressure is not to exceed 0.4 MPa, determine the maximum width of the block. **07**

(b) Describe a step by step procedure to draw Klein's construction for determining acceleration. **07**

OR

Q.4 **(a)** A punching machine is required to punch 30 mm diameter hole in a 20 mm thick plate at a rate of 20 holes per minute. It requires 6 Nm of energy / mm^2 of area sheared. If punching takes places in 1/10 of a second and rpm of flywheel varies from 160 to 140, determine the mass of the flywheel with radius of gyration 1 m. **07**

(b) Illustrate the procedure to determine lengths of links of four bar mechanism using Freudnestein's equation. **07**

Q.5 **(a)** Enlist graphical methods for synthesis of four bar mechanism and illustrated any one of them. **07**

(b) The turbine rotor of a ship having a mass of 200 kg rotates at 2000 rpm. Its radius of gyration is 0.3 m. If the rotation of the rotor is clockwise looking from the aft, determine the gyroscopic couple set by the rotor when (1) ship takes a left turn at a radius of 300 m at a speed of 30 kmph (2) ship pitches with bow rising at a n angular velocity of 1 rad/s and (3) ship rolls at an angular velocity of 0.1 rad/s. **07**

OR

Q.5 **(a)** With the required equation, describe step by step procedure of Bloch's method for synthesis. **07**

(b) The upper arms of a porter governor are pivoted on the axis of rotation and the lower arms are attached to the sleeve at a distance of 37.6 mm from the axis. The lengths of the arm and suspension links are 300 mm. The weight of each ball is 60 N and the load on the sleeve is 480 N. If the extreme radii of rotation of balls are 200 mm and 250 mm, find the corresponding equilibrium of speeds. **07**

****

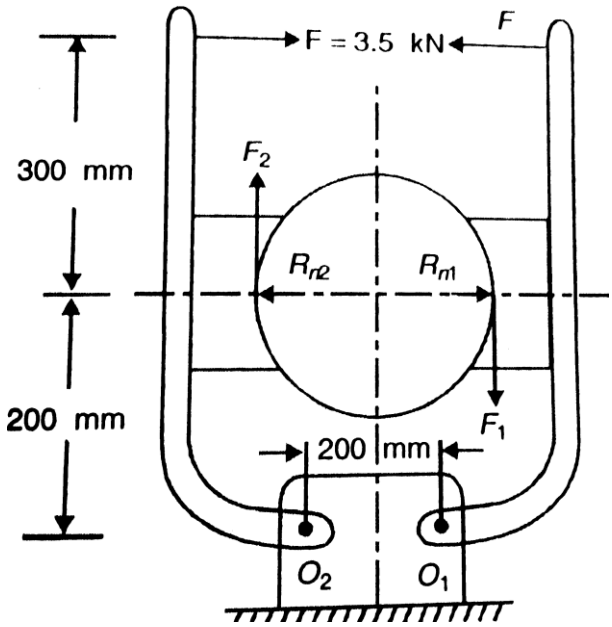

Fig 1.