Seat No.: _____ Enrolment No._____

GUJARAT TECHNOLOGICAL UNIVERSITY
BE - SEMESTER– V • EXAMINATION – WINTER 2016

Subject Code: 151905 **Date: 02/12/2016**
Subject Name: Machine Design-I
Time: 02:30PM – 05:00PM **Total Marks: 70**

Instructions:

1. **Attempt all questions.**
2. **Make suitable assumptions wherever necessary.**
3. **Figures to the right indicate full marks.**

Q.1 (a) Draw and explain Goodman's and Soderberg's diagram with neat sketches. 07

(b) Answer the following (any TWO) : 07

i. Manufacturing and assembly considerations in machine design
ii. Thermal considerations in design
iii. Wear considerations in design

Q.2 (a) Explain the factors affecting selection of spring materials. List the different spring materials also. 07

(b) Design a helical tension spring for a spring loaded safety valve from the following given data. 07

Diameter of valve seat = 70 mm , operating pressure when the valve begins to left = 0.7 MPa , maximum pressure when the valve blows off freely = 0.75 Mpa, Lift of the valve during the change of pressure = 4 mm , design shear stress for spring material = 560 MPa , Take G=0.84 X 10^5 MPa and spring index =6

OR

(b) A semi-elliptical leaf spring consists of two full length leaves and ten graduated length leaves. The spring supports are 0.7 m apart. The maximum force acting on the spring is 20 kN and the width of the central band is 80 mm. The spring material has permission shear stress 460 N/mm^2. The ratio of total depth to width of the spring is 3. The modulus of elasticity of the leaf material is 2.1 x 10^5 N/mm^2. 07

Determine :

(i) The thickness and width of spring leaves.
(ii) The deflection of the spring when extra full length leaf is not pre-stressed.

Q.3 (a) (i) State and Explain the factors affecting the selection of a suitable antifriction bearing. 07

(b) A high pressure cylinder consists of a steel tube with 20 mm and 35 mm as inner and outer diameters respectively. It is jacketed by outer steel tube with 50 mm outer diameter. The tubes are assembled by shrinking process in such a way that the maximum tensile stress induced in any tube is limited to 100 N/mm^2 . Calculate the shrinking pressure and original dimensions of the tubes. Take E = 2.0 x 10^5 N/mm^2 . 07

OR

Q.3 (a) State and explain the design of different types of formed heads (end closures) used in pressure vessels with neat sketches. 07

(b) The following data refers to a journal bearing: 07

Diameter of journal = 50 mm Length on journal = 80 mm

Speed of journal = 1000 rpm Load on journal = 11.5 kN

Permissible bearing pressure = 6 N/mm^2

The ratio of journal diameter to diametral clearance = 1000

Ambient temperature = 25^0 C.

Absolute viscosity of lubricating oil at operating temperature 75^0 C = 0.015 kg/m-s

Viscosity of lubricant = 0.025 kg/m-sec. Specific heat of oil = 1900 J/kg/^{o}C

Heat dissipation coefficient = 500 W/ $m^2/^oC$

Find i) the amount of artificial cooling required ii) the mass of coolant oil required if the difference between the outlet and inlet temperature of the oil is 10 ^{0}C.

Q.4 (a) (i) Compare the uniform pressure and uniform wear criterion used in clutch design. 07

(ii) Why the semi-cone angle in cone clutch is usually taken more than12.5^0 ? Explain this.

(b) Design a single plate clutch with effective one pair of contacting surfaces from the following specification: 07

Power to be transmitted = 18.5 kW Speed = 750 r.p.m.

Outer diameter = 2 times internal diameter

Permissible pressure for the lining = 1 MPa Coefficient of friction = 0.20 Design torsional shear stress for shaft material = 45 MPa

OR

Q.4 (a) (i) Write a detailed note on friction materials used in friction clutches. 07

(ii) Explain the factors to be considered while selecting suitable clutch.

(b) The pivoted block brake shown in figure has a face width of 50 mm, the coefficient of friction and design pressure intensity between the friction lining and brake drum are 0.25 and 0.55 MPa respectively. The pivot of the shoe is located such that the moment of frictional forces on shoe about the pivot is zero. Find 1) the braking torque capacity 2) the actuating force. 07

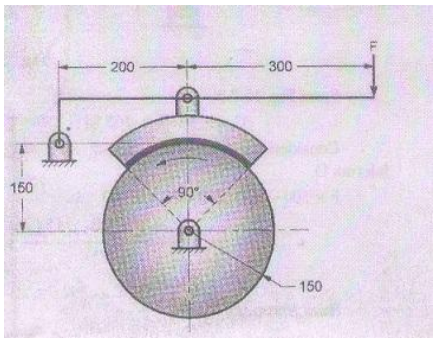

Q.5 (a) Write a detailed note on: Design / selection of Chain drives. 07

(b) The following refers to a flat belt drive: 07

Power to be transmitted = 12 kW
Speed of the driving (motor) pulley = 1500 r.p.m.
Diameter of pulley on driving shaft = 200 mm,
Diameter of pulley of driven shaft = 500 mm
Centre distance between two pulleys = 2 m
Coefficient of friction=0.38
Maximum Permissible stress in belt = 2 MPa
Density of belt material = 950 kg/m^3
Thickness of the belt = 8 mm
Find 1) width of the belt 2) length of the belt.

OR

Q.5 (a) (i) Explain the different types of stresses induced in a belt with neat sketch. 07

(ii) How the V- belts are designated as per BIS? Explain.

(b) The following refers to a V- belt drive: 07

Power to be transmitted = 20 kW
Motor speed = 960 rpm
Each belt has area of cross section = 143 mm^2
Groove angle for pulley = 40^0
Density of belt material = 1000 kg/m^3
Diameter of pulley on motor shaft = 250 mm
Speed of pulley of driven shaft = 460 r.p.m.
Centre distance = 1.2 m
Maximum permissible stress for belt = 2 MPa
Coefficient of friction between belt and pulley = 0.30
Find the number of belts required and pitch length of the belt.

****