Seat No.: _____ Enrolment No._____

GUJARAT TECHNOLOGICAL UNIVERSITY

BE - SEMESTER–III(New) • EXAMINATION – WINTER 2016

Subject Code:2131006 Date:04/01/2017

Subject Name:Electronic Devices and Circuits

Time:10:30 AM to 01:00 PM Total Marks: 70

Instructions:

1. **Attempt all questions.**
2. **Make suitable assumptions wherever necessary.**
3. **Figures to the right indicate full marks.**

Q.1 Short Questions **14**

1 Knee voltage of germanium diode is _____ then silicon diode.
2 In reverse bias current through diode is very _____.
3 Frequency of full wave rectified voltage is _____.
4 If filter capacitance increased, diode forward bias period _____.
5 Varactor diode is used in _____ bias.
6 Size of collector is _____ compare to emitter.
7 Transistor is on when it is operating in _____ region.
8 Transistor collector current is _____ when it is operating in cut off region.
9 For emitter bias, voltage at emitter is 0.7 less then _____ voltage.
10 Current in a coupling capacitor circuit for high frequencies is _____.
11 Input impedance of the base of an emitter follower is _____ .
12 Audio amplifier operates in frequency range of _____.
13 A JFET is _____ controlled device.
14 Full form of CMOS is _____.

Q.2 (a) Draw and explain full wave bridge rectifier. **04**

(b) Due to any cause R becomes 0 in fig. 1. What will be effect on diode and what will be diode voltage? **03**

(c) In fig. 2 what is maximum positive and negative output voltage? Sketch the output waveforms. **07**

OR

(c) Draw half wave rectifier circuit. Draw waveform for voltage across diode, diode current with R and RC load. **07**

Q.3 (a) Explain transistor construction with size and doping level of each region. **03**

(b) What is voltage divider bias? What is its disadvantage? How it is removed with emitter bias? **07**

(c) What is base, collector and emitter voltage in fig.3. **04**

OR

Q.3 (a) How transistor act as a switch? What are limitations? **03**

(b) What is I_{CQ} , V_{CEQ} and r_c in fig. 4. **04**

(c) Explain transistor characteristics with clearly indicating saturation, active and cut off region. How load line is drawn in characteristics. **07**

Q.4 (a) Explain Class AB operation of power amplifier. **03**

(b) Explain small signal common emitter amplifier. **04**

(c) Transistor in fig.5 has current gain of 150 and zener voltage 7.5.What is output voltage , zener current and transistor power dissipation. **07**

OR

Q.4 (a) Explain Class A operation of power amplifier. **03**

(b) Explain small signal common collector amplifier. **04**

(c) Draw ac equivalent circuit of fig. 6. **07**

Q.5 (a) Explain thermal runaway with respect to MOSFET. **03**

	(b)	What is negative and positive feedback?	**04**
	(c)	Explain construction, operation and characteristics of JFET.	**07**

OR

Q.5	**(a)**	What are advantages of JFET over Bipolar Junction Transistor?	**03**
	(b)	How JFET are biased?	**04**
	(c)	What are different four types of feedback?	**07**

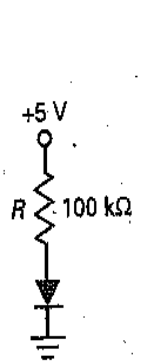

Fig 1

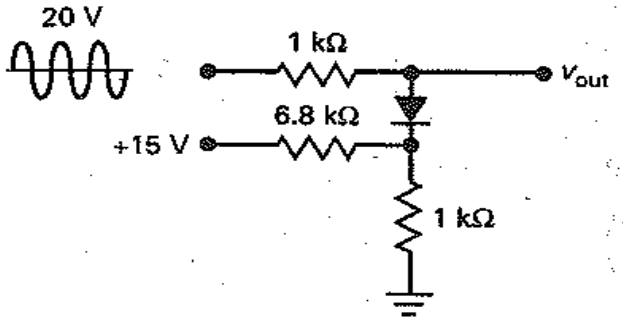

Fig 2

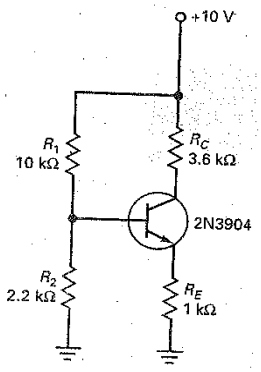

Fig 3

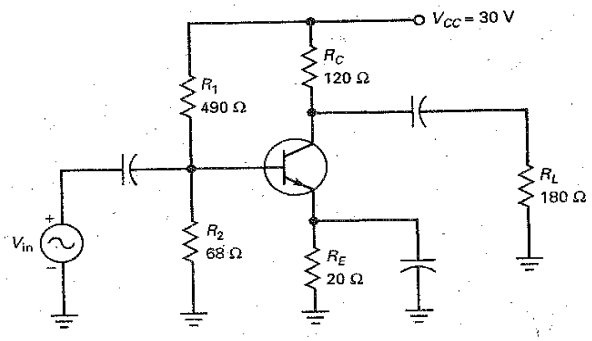

Fig 4

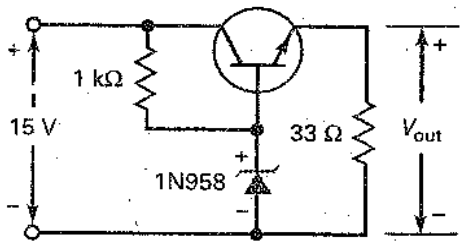

Fig 5

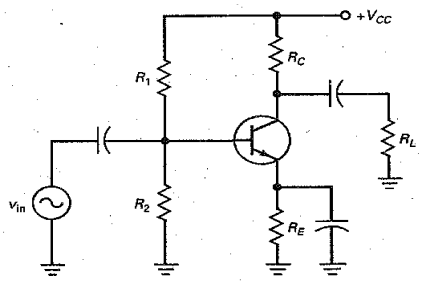

Fig.6