Seat No.: _____ Enrolment No._____

GUJARAT TECHNOLOGICAL UNIVERSITY

BE - SEMESTER–III(New) • EXAMINATION – WINTER 2016

Subject Code:2133405 Date:09/01/2017

Subject Name:Manufacturing and Assembly Drawing

Time:10:30 AM to 01:00 PM Total Marks: 70

Instructions:

1. **Attempt all questions.**
2. **Make suitable assumptions wherever necessary.**
3. **Figures to the right indicate full marks.**

			MARKS
Q.1		**Short Questions**	**14**
	1	Define Fit.	
	2	Draw the Conventional representation of Semi elliptical leaf spring with eyes and centre band .	
	3	What is Positional Tolerance ?	
	4	Draw the Surface roughness symbols for Roughness values Ra 0.025µm and 0.4µm.	
	5	Draw the Conventional representation of Bearings.	
	6	Draw the Conventional representation of Spiral spring.	
	7	Draw the Conventional representation of Diamond Knurling.	
	8	Draw the Conventional representation of Tapped Hole.	
	9	Draw the Symbol for Double J Butt Welded joint.	
	10	Draw the Conventional representation of serrated shaft.	
	11	What is the acronym for High Carbon Steel ?	
	12	Draw the Conventional representation of Internal Screw threads.	
	13	Draw conventional representation of Spur Gear.	
	14	What is the thread angle for external thread ?	
Q.2	**(a)**	Define Ferrous and Non-Ferrous Metals and give example of each.	**03**
	(b)	Describe about Titanium and magnesium alloys	**04**
	(c)	Define Steel and Describe its classification	**07**
		OR	
	(c)	Write down the properties and applications of Aluminium and its alloys	**07**
Q.3	**(a)**	Define Allowance. Explain with an example.	**03**
	(b)	Draw any Seven Conventional Representation of Section lines.	**04**
	(c)	Classify the Types of Fits and explain in detail with neat sketches.	**07**
		OR	
Q.3	**(a)**	What do you mean by Datum and draw its symbol.	**03**
	(b)	List out Geometrical Tolerances Symbols with illustration in production drawing.	**04**
	(c)	Differentiate between Hole Basis System and Shaft Basis System.	**07**
Q.4	**(a)**	Define tolerance and explain what is need of tolerance for manufacturing ?	**03**
	(b)	What are the basic Elements of Production Drawing ?	**04**
	(c)	What are the basic principles of dimensioning in production Drawing ?	**07**
		OR	
Q.4	**(a)**	What is Production Drawing ?	**03**
	(b)	Explain Unilateral and Bilateral Tolerance with an example each	**04**
	(c)	Explain what do you mean by B.O.M . Draw a sample B.O.M	**07**

Q.5 The Fig 1 Shows the parts of a Screw Jack .Assemble the parts and draw the Sectional Front view and Top view **14**

OR

Q.5 (a) Explain Injection Mould and its parts. **06**

(b) Describe terminology for surface roughness and list out its symbols with illustrations **08**

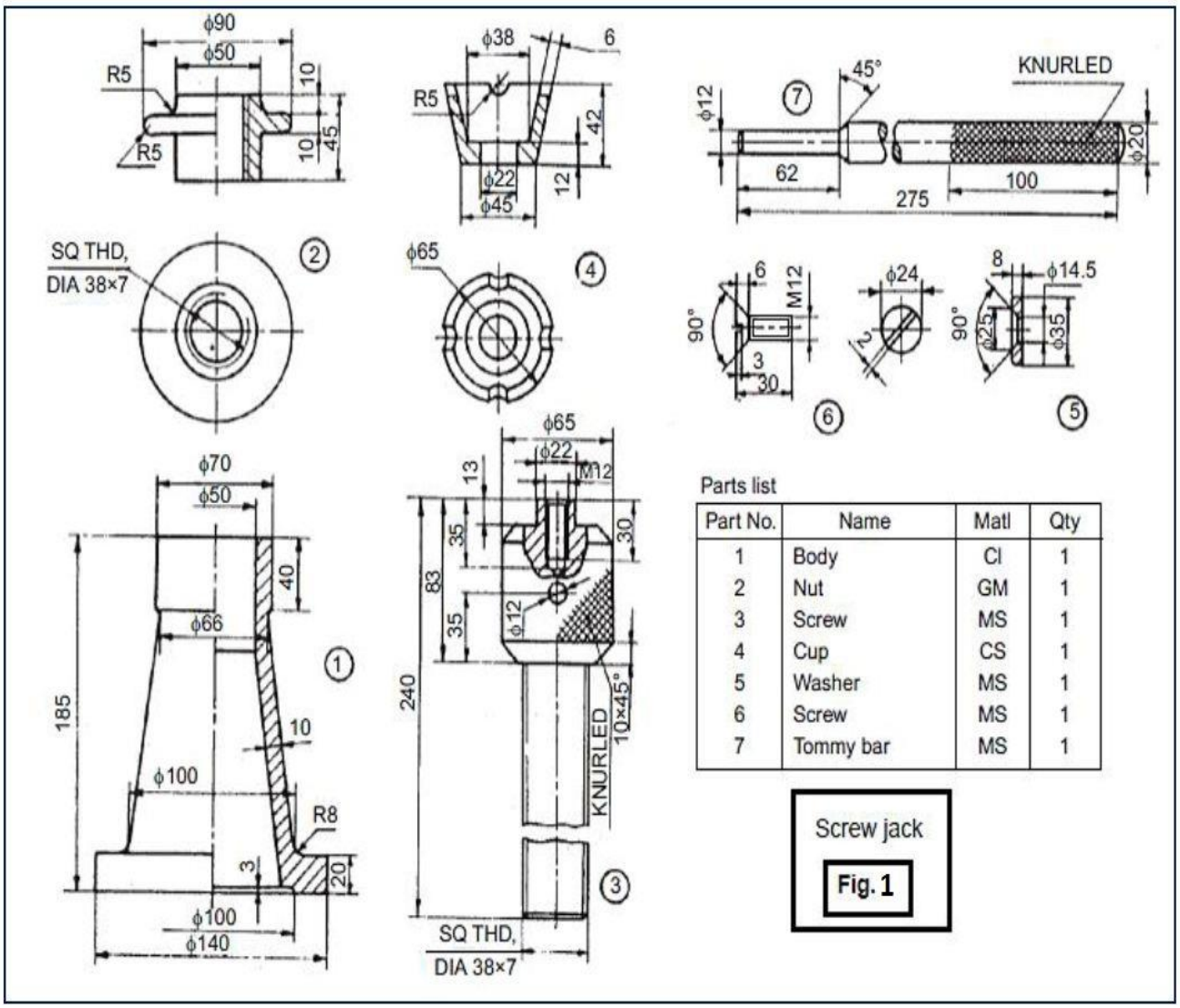

Part No.	Name	Matl	Qty
1	Body	CI	1
2	Nut	GM	1
3	Screw	MS	1
4	Cup	CS	1
5	Washer	MS	1
6	Screw	MS	1
7	Tommy bar	MS	1

****