Seat No.: _____ Enrolment No._____

# GUJARAT TECHNOLOGICAL UNIVERSITY

**BE - SEMESTER–IV(New) • EXAMINATION – WINTER 2016**

**Subject Code:2140307** **Date:25/11/2016**

**Subject Name:Control System and Analysis**

**Time:02:30 PM to 05:00 PM** **Total Marks: 70**

**Instructions:**

1. **Attempt all questions.**
2. **Make suitable assumptions wherever necessary.**
3. **Figures to the right indicate full marks.**

**MARKS**

**Q.1 Short Questions. 14**

**1** For a unity feedback system with $G(s) = 10 / s^2$, what would be the value of centroid?

A 0 B 5

C 2 D 10

**2** State model representation is possible using _____

A Canonical state variables B Phase variables

C Physical variables D All of the above

**3** Which of the following is exhibited by Root locus diagrams?

A The poles of the transfer function for a set of parameter values B The bandwidth of the system

C The frequency response of a system D The response of a system to a step input

**4** According to Nyquist stability criterion, where should be the position of all zeros of q(s) corresponding to s-plane?

A On right half B At the center

C On left half D Random

**5** Zero initial condition for a system means

A zero stored energy B input reference signal is zero

C no initial movement of moving parts D system is at rest and no energy is stored in any of its components

**6** On which of the following factors does the sensitivity of a closed loop system to gain changes and load disturbances depend ?

A Frequency B Loop gain

C Forward gain D All of the above

**7** If the constant 'k' is positive, then what would be its contribution on the phase plot of bode diagram?

A 0° B 45°

C 90° D 180°

**8** Static error coefficients are used as a measure of the effectiveness of closed loop systems for specified _____ input signal.

A position B velocity

C acceleration D all of the above

**9** The type 0 system has _____ at the origin.

A simple pole B complex poles

C no pole D none of the above

**10** The type 2 system has _____ at the origin.

A no pole B one pole

C two poles D complex poles

**11** The position and velocity errors of a type-2 system are

A zero, zero B zero, constant

C constant, constant D constant, infinity

**12** Velocity error constant of a system is measured when the input to the system is unit _____ function.

A impulse B step

C ramp D parabolic

**13** Which of the following is the best method for determining the stability and transient response?

A Root locus B Bode plot

C Nyquist plot D None of the above

**14** Phase margin of a system is used to specify which of the following?

A Relative stability B Absolute stability

C Frequency response D Time response

**Q.2** **(a)** For the unity feedback control system having open loop transfer function given below, determine the system "TYPE" and error constant $K_p$, $K_v$, $K_a$. **03**

$$G(s) = \frac{k\,(s+2)}{s\,(3s^3+4s^2+6s)}$$

**(b)** Figure shows a system with two inputs and two outputs. Derive $C_1(s)/R_2(s)$ & $C_2(s)/R_1(s)$. **04**

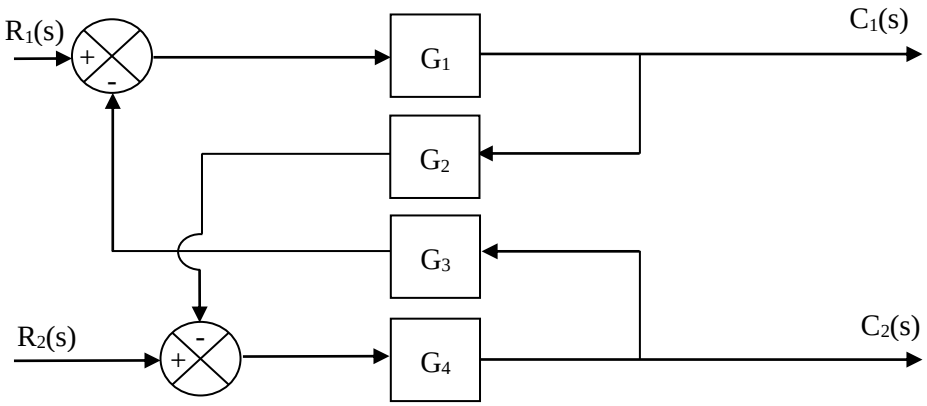


**(c)** Simplify the block diagram shown in Figure. Obtain the closed-loop transfer function C(s)/R(s). **07**

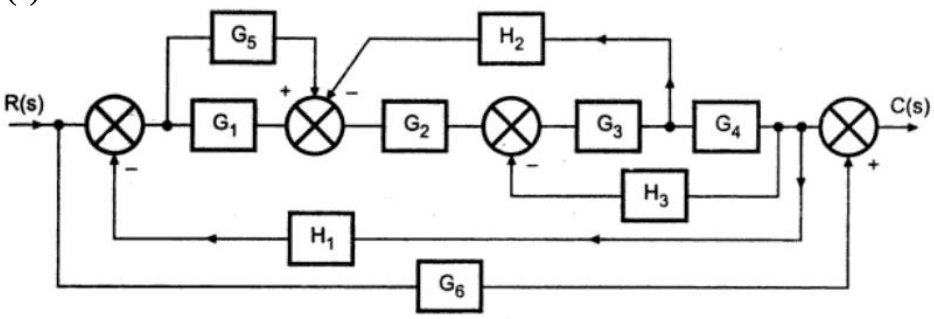


**OR**

**(c)** Simplify the block diagram shown in Figure. Obtain the closed-loop transfer function C(s)/R(s). **07**

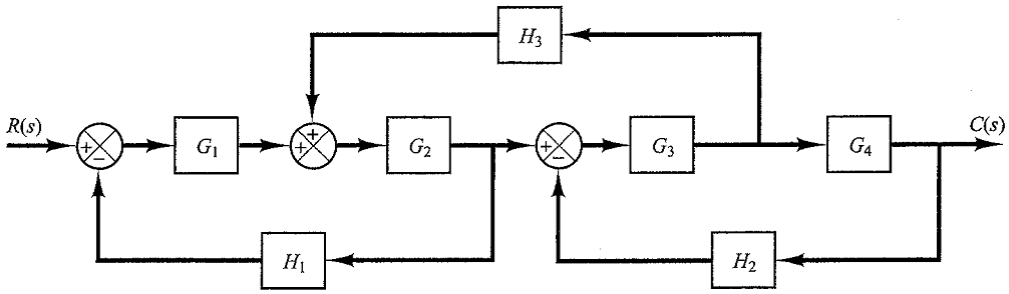

**Q.3** **(a)** Describe the Mason's Gain formula. **03**

**(b)** The characteristic equation for a feedback control system is given by $S^3 + 17k.S^2 + 3S^2 + 8S + 10 = 0$. Determine the range of $k$ for which the system is stable. **04**

**(c)** Obtain the closed-loop transfer function C(s)/R(s) of below given system by use of Mason's gain formula. **07**

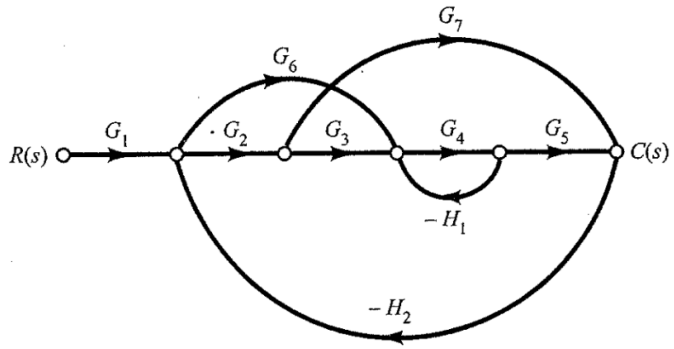


**OR**

**Q.3** **(a)** Explain hurwitz's stability criterion. **03**

**(b)** Discuss Routh's stability criteria for below given characteristic equation. **04**

$$S^6 + 2S^5 + 6S^4 + 13S^3 + 7S^2 + 12S + 9 = 0$$

**(c)** Obtain the closed-loop transfer function C(s)/R(s) of below given system by use of Mason's gain formula. **07**

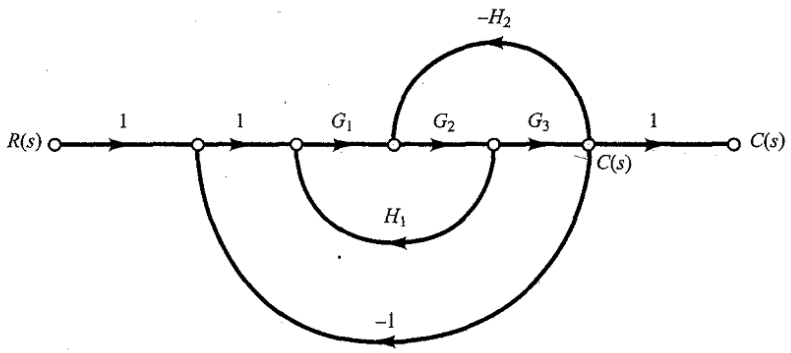


**Q.4** **(a)** A closed loop system has two complex conjugate poles at $s_1, s_2 = -2 \pm j\,1$. Determine the form of transfer function and values of $\omega_n$, $T_P$, $T_R$, $T_S$ and % $M_P$ assuming standard second order system. **03**

**(b)** Draw the equivalent analogous systems based on F-V & F-I methods for given systems. **04**

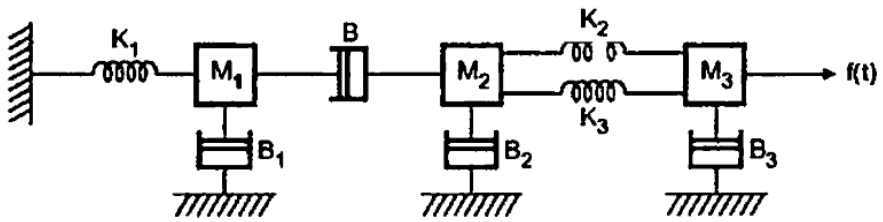


**(c)** Consider a unity-feedback control system with the open-loop transfer function **07**

$$G(s) = \frac{k}{s(s^2+2s+4)}$$

Determine the value of the gain K such that the phase margin is 50˚. What is the gain margin with this gain K?

**OR**

**Q.4** **(a)** The open loop transfer function of unity feedback control system is $G(s) = \frac{K}{s(sT+1)}$. By what factor the amplifier gain K should be multiplied so that damping ratio is increased from 0.2 to 0.8? **03**

**(b)** A second order system has unity feedback and open loop transfer function $G(s) = \frac{500}{s(s+15)}$ **04**

a) What is characteristic equation of system?
b) Find damping ratio and natural frequency of system.
c) Calculate $T_P$, % $M_P$, and $T_S$ for the system output response when given unit step input.
d) If input is ramp of 0.5 rad/sec, calculate steady state error.

**(c)** Obtain the phase and gain margins of the system shown in figure for the two cases, where K = 10 and K = 100 with the help of bode plot. Also discuss about the stability of same system with both gain. **07**

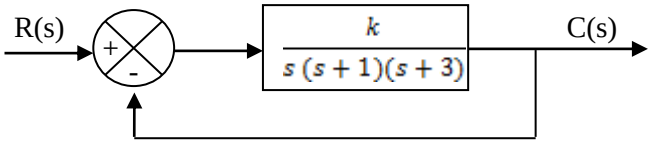


**Q.5** **(a)** List the advantages of nyquist plot. **03**

**(b)** Determine the transfer function of the system, whose asymptotic gain plot is given below. **04**

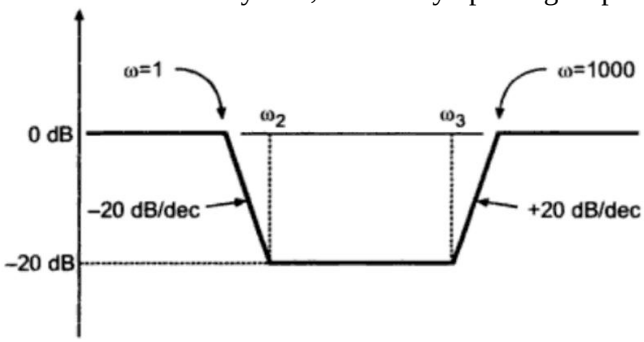


**(c)** Draw the nyquist plot of below given open-loop transfer function: **07**

$$G(s) = \frac{1}{s^2+0.6s+2}$$

**OR**

**Q.5** **(a)** Explain nyquist stability criterion. **03**

**(b)** Explain the definitions of $\omega_{gc}$ & $\omega_{pc}$ in polar plot with example. **04**

**(c)** Find the range of values of K for which the closed-loop system is stable by using Nyquist criterion. **07**

$$G(s)\,H(s) = \frac{k(s+1)}{s(s-1)}$$

**********