Seat No.: _____ Enrolment No._____

GUJARAT TECHNOLOGICAL UNIVERSITY

BE - SEMESTER–IV(New) • EXAMINATION – WINTER 2016

Subject Code:2142001 **Date:22/11/2016**

Subject Name:Kinematics & Dynamics of Machines

Time:02:30 PM to 05:00 PM **Total Marks: 70**

Instructions:

1. **Attempt all questions.**
2. **Make suitable assumptions wherever necessary.**
3. **Figures to the right indicate full marks.**

Q.1 Answer the following questions: **14**

1 Various kinematic pairs are given below choose the lower pair
(a) Ball bearing (b) Tooth gears in mesh
(c) cam and follower (d) crank shaft and bearing

2 Write the equation of motion for damped forced vibration.

3 For same lift of the follower and same angle of action for ascent of the follower in cams larger base circle diameter will give
(a) smaller pressure angle (b) larger pressure angle
(c) same pressure angle (d) changes according to other data of cam.

4 Coriolis component of acceleration does not exist in
(a) shaper quick return mechanism
(b) Whitworth quick return mechanism
(c) crank and slider mechanism
(d) none of above

5 The number of instantaneous centers for eight link kinematic chain is
(a) 16 (b) 8 (c) 28 (d) 56

6 Why reciprocating masses are balanced partially?

7 Write the equation of gyroscopic torque.

8 The type of gears used to connect two non-parallel non intersecting shafts are
(a) spur gear (b) bevel gear
(c) cross helical gear (d) spiral gear

9 When the axes of first gear and the last gear of compound gear train are co-axial, the gear train is called
(a) epicyclic gear train (b) reverted gear train
(c) simple gear train (d) all of above

10 Write the condition to transmit maximum power in belt drive.

11 The crowing of the pulley is done to
(a) prevent the belt running off the pulley
(b) improve the shape of pulley for safety considerations
(c) improve the strength of pulley
(d) improve the torque transmitted by the pulley

12 A pantograph is a kinematic arrangement
(a) which using only lower kinematic pairs to enlarge or reduce movements
(b) which using only lower kinematic pairs reproduces drawings to different scales
(c) which using only lower kinematic pairs are used for guiding cutting tools
(d) which using only lower kinematic pairs are used for all the above.

13 Write the Gruebler's equation to determine the degree of freedom of mechanism.

14 The natural frequency of the system is function of
(a) stiffness of the system (b) mass of the system
(c) damping in the system (d) both (a) and (b)

Q.2 **(a)** Explain different kinematic pairs with suitable examples. **03**

(b) Determine all possible I-centres of Four bar mechanisms. **04**

(c) A quick return mechanism is shown in the following figure. Link 2 rotates at 20 rad/sec. Draw the velocity and acceleration diagram. Take OA = 150 mm, OC =350 mm, BC = 250 mm. **07**

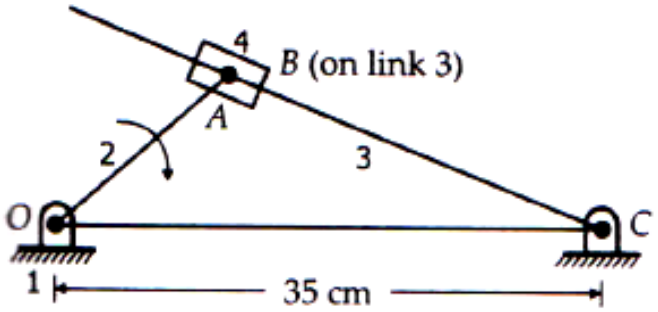

OR

(c) The following figure shows four bar mechanism. Draw the acceleration diagram and determine the acceleration of point E and R. **07**

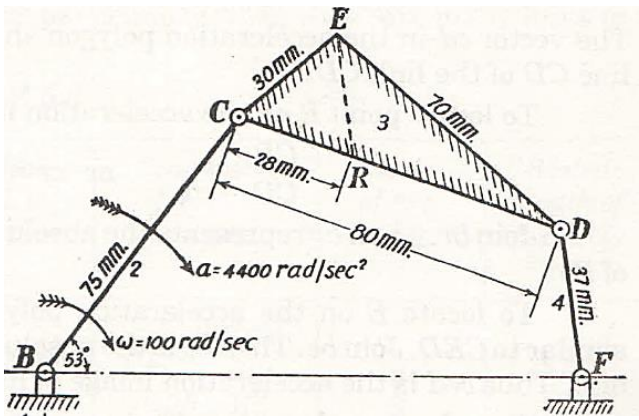

Q.3 **(a)** Derive the expression for tension ratio of flat belt drive. **03**

(b) Explain the different kind of pulley arrangements of belt drives with their applications. **04**

	(c)	A 100 mm wide and 10 mm thick belt transmits 5 kW between two parallel shafts. The distance between the shaft centres is 1.5m and the diameter of the smaller pulley is 440 mm. The driving and driven shafts rotate at 60 rpm and 150 rpm, respectively. Find the stress in the belt if the two pulleys are connected by : (1) an open belt drive and (2) a cross belt drive. Take $\mu = 0.22$.	**07**
		OR	
Q.3	**(a)**	Derive the expression to determine the length of cross belt drive.	**03**
	(b)	Discuss the effect of gyroscopic couple on naval ship.	**04**
	(c)	A rope drive transmits 74 kW through a 1.50 m diameter 45° grooved pulley rotating at 200 rpm. Angle of lap is 160°. The mass of each rope is 0.06 kg/m and can safely take a pull of 800 N. Taking centrifugal tension into account, determine (a) initial rope tension, and (2) the number ropes required. Take $\mu = 0.30$.	**07**
Q.4	**(a)**	Derive an expression for the velocity of sliding between a pair of involute teeth.	**03**
	(b)	Determine the minimum number of teeth on the pinion in order to avoid interference.	**04**
	(c)	Two mating gears having 20 and 40 involute teeth of module 10 mm and 20° pressure angle. The addendum on each wheel is to be made of such a length that the line of contact on each side of the pitch point has half the maximum possible length. Determine the addendum height for each gear wheel, length of the path of contact, arc of contact and contact ratio.	**07**
		OR	
Q.4	**(a)**	Compare the different tooth profiles gear.	**03**
	(b)	Explain stability of two wheel vehicle taking turn.	**04**
	(c)	How the velocity ratio of epicyclic gear train is obtained by tabular method? What are the various types of torques in epicyclic gear train?	**07**
Q.5	**(a)**	Draw the displacement, velocity and acceleration diagram for a follower when it moves with simple harmonic motion.	**03**
	(b)	Explain under damping, critical damping and over damping with suitable diagrams.	**04**
	(c)	A shaft carries four rotating masses A, B, C and D which are in complete balance. The masses A, B, C and D are connected at radii 180 mm, 240 mm, 120 mm and 150 mm respectively. The masses B, C and D are 30 kg, 50 kg and 40 kg respectively. The planes of rotation of masses B and C are 300 mm apart. The masses C and D make angle of 90° and 210° respectively with mass B in the same sense.. Determine: 1. The mass A and its angular position 2. The positions of planes A and D.	**07**
		OR	
Q.5	**(a)**	What do you understand by static and dynamic balancing of rotating masses?	**03**
	(b)	The measurements on a mechanical vibrating system shows that it has a mass of 8 kg and that the springs can be	**04**

combined to give an equivalent spring of stiffness 5.4 N/mm. if the vibrating system has a dashpot attached which exerts a force of 40 N when the mass has a velocity of 1 m/s, find the (1) critical damping coefficient (2) damping factor (3) logarithmic decrement (4) ratio of two consecutive amplitudes.

(c) The following data relate to a cam profile in which the follower moves with SHM during ascent and with uniform acceleration and deceleration during descent. **07**

Minimum radius of cam = 25 mm, roller diameter = 25 mm, lift of follower = 40 mm, offset of follower axis = 12.5 mm towards right, angle of ascent = 120°, angle of descent =150°, angle of dwell between ascent and descent =45°, speed of the cam = 200 rpm.

Draw the profile of the cam.

****