Seat No.: _____ Enrolment No._____

GUJARAT TECHNOLOGICAL UNIVERSITY

BE - SEMESTER–IV(New) • EXAMINATION – WINTER 2016

Subject Code:2142504 **Date:24/11/2016**

Subject Name: Theory of Machines

Time:02:30 PM to 05:00 PM **Total Marks: 70**

Instructions:

1. **Attempt all questions.**
2. **Make suitable assumptions wherever necessary.**
3. **Figures to the right indicate full marks.**
4. **Use drawing sheet/s for graphical solutions & answer-book/s for analytical solutions.**

Q.1		**Short Questions: [each carries equal marks]**	**14**
	1	A ball & socket joint forms a _____ (a) turning pair (b) rolling pair (c) spherical pair (d) sliding pair	
	2	In a Pantograph, all the pairs are _____. (a) turning pairs (b) sliding pairs (c) spherical pairs (d) self-closed pairs	
	3	The cam follower generally used in automobile engines is _____. (a) roller follower (b) spherical faced follower (c) flat faced follower (d) knife edge follower	
	4	The type of gears used to connect two non-parallel non-intersecting shafts is _____. (a) spur gears (b) helical gears (c) spiral gears (d) none of these	
	5	Name four approximate straight line motion mechanisms.	
	6	The frictional torque transmitted by a cone clutch is same as that of _____. (a) flat pivot bearing (b) flat collar bearing (c) conical pivot bearing (d) trapezoidal pivot bearing	
	7	Which of the following is an inversion of double slider crank chain? (a) Coupling rod of a locomotive (b) Pendulum pump (c) Elliptical trammel (d) Oscillating cylinder engine	
	8	The train value of a gear train is _____. (a) equal to velocity ratio of a gear train (b) reciprocal of velocity ratio of a gear train (c) always greater than unity (d) always less than unity	
	9	Offset is provided to a cam follower mechanism to _____. (a) minimize the side thrust (b) accelerate (c) avoid jerk (d) make it strong (e) none of these	
	10	The radius of a friction circle for a shaft of radius ‘r’ rotating inside a bearing is _____. (a) rsinØ (b) rcosØ (c) rtanØ (d) rcotØ	
	11	The direction of linear velocity of any point on a link with respect to another point on the same link is _____. (a) parallel to the link joining the points (b) perpendicular to the link joining the points (c) at 45^0 to the link joining the points (d) none of these	
	12	The coriolis component of acceleration is taken into account for _____. (a) slider crank mechanism (b) four bar chain mechanism (c) quick return motion mechanism (d) double slider mechanism	

	13	The synthesis of mechanism deals with _____. (a) the determination of input & output angles of a mechanism. (b) the determination of dimensions of the links of a mechanism. (c) the determination of displacement, velocity & acceleration of the link in a mechanism. (d) none of these.	
	14	What is meant by type synthesis?	
Q.2	**(a)**	For the mechanism shown in figure – 1, calculate the number of binary, ternary & quaternary links. Also, calculate the degree of freedom of the mechanism.	**03**
	(b)	Sketch the Ackermann steering gear with labeling. Give the reason why the Ackermann steering gear, which does not satisfy the condition for correct gearing in all positions, is preferred to the Davis steering gear?	**04**
	(c)	In a reverted epicyclic gear train, the arm A carries two gears B and C and a compound gear D-E. The gear B meshes with gear E and the gear C meshes with gear D. The number of teeth on gear B, C and D are 75, 30 and 90 respectively. Find the speed and direction of gear C when the gear B is fixed and the arm A makes 100 rpm clockwise.	**07**
		OR	
	(c)	A pinion having 30 teeth drives a gear having 80 teeth. The profile of the gears is involute with 20^0 pressure angle, 12 mm module and 10 mm addendum. Find (i) the length of path of contact (ii) the length of arc of contact & (iii) the contact ratio.	**07**
Q.3	**(a)**	Write the names of all the inversions of a four bar chain mechanism.	**03**
	(b)	State & prove Arnold-Kennedy's theorem.	**04**
	(c)	Figure – 2 shows the toggle mechanism in which the crank OA has rotated 45^0 from vertical position clockwise. The length of links are OA=100 mm, AB=250 mm, BC=300 mm, BD=350 mm. The crank OA rotates at a speed of 300 rpm in clockwise direction. Draw the velocity diagram for the given phase & determine the (i) velocity of slider D & (ii) angular velocity of link BD.	**07**
		OR	
Q.3	**(a)**	The angle between the axes of two shafts connected by a Hook's joint is 18^0. Determine the angle turned through by the driving shaft when the velocity ratio is maximum and unity.	**03**
	(b)	State the motions imparted to a follower by a cam and sketch the displacement-time diagrams for each motion type.	**04**
	(c)	Derive the expression for the coriolis component of acceleration for any link PQ rotating with an angular velocity ω rad/s about a fixed point O with a point R on it moving along it at a linear velocity v m/s.	**07**
Q.4	**(a)**	Define the following terms for a gear: (i) Pitch circle (ii) Flank (iii) Addendum	**03**
	(b)	Give detailed classification of cams. Draw a sketch for each of them.	**04**
	(c)	Design & draw a four bar chain O_2ABO_4 (in which O_2O_4 is fixed) by inversion method to meet the following requirements: Θ_{12} = 40º, Θ_{13} = 60º, $\varnothing_{12}$ = 30º, $\varnothing_{13}$ = 50º, O_2O_4 = 100 mm, O_4B_1 = 95 mm, $\varnothing_1$ = -110º Measure O_2A_1, A_1B_1 and angle Θ_1.	**07**
		OR	
Q.4	**(a)**	Define the following terms related to a cam: (i) Pitch point (ii) Pressure angle (iii) Dwell	**03**

	(b)	Draw & explain Peaucellier mechanism with condition to fulfill its motion type.	**04**
	(c)	Design & draw a four bar chain mechanism O_2ABO_4 (in which O_2O_4 is fixed) using Freudenstein equation with three accuracy point & Chebyshev's spacing so that the input and output angles will be coordinated as follows: Input angle (θ) 0^0 30^0 60^0 Output angle (Ø) 30^0 50^0 80^0 Measure the length A_1B_1 obtained from the solution.	**07**
Q.5	**(a)**	State the Gruebler's criterion. What is the limitation of it?	**03**
	(b)	State different types of rope drives. What are the advantages & limitations of rope drives over other drives?	**04**
	(c)	A leather belt is required to transmit 7.5 kW from a pulley 1.2 m in diameter, running at 250 rpm. The angle embraced is 165^0 and the coefficient of friction between the belt and the pulley is 0.3. If the safe working stress for the leather belt is 1.5 MPa, density of leather 1 Mg/m^3 and thickness of belt 10 mm, determine the width of the belt taking centrifugal tension into account.	**07**
		OR	
Q.5	**(a)**	Classify chains and draw the sketch of each class.	**03**
	(b)	A conical pivot bearing supports a vertical shaft of 200 mm diameter. It is subjected to a load of 30 kN. The angle of the cone is 120^0 and the coefficient of friction is 0.025. Find the power lost in friction when speed is 140 rpm, assuming (i) uniform pressure & (ii) uniform wear conditions.	**04**
	(c)	Derive an expression for total length of belt for a cross belt drive with usual notations.	**07**

****

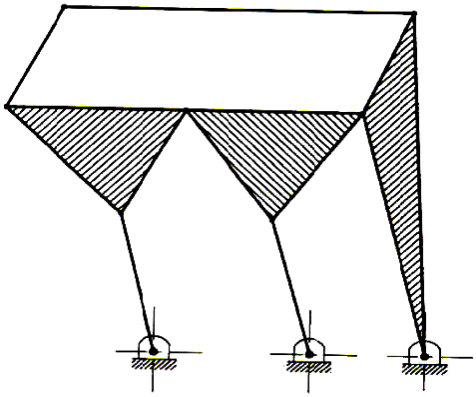

Figure – 1 [Q.2 (a)]

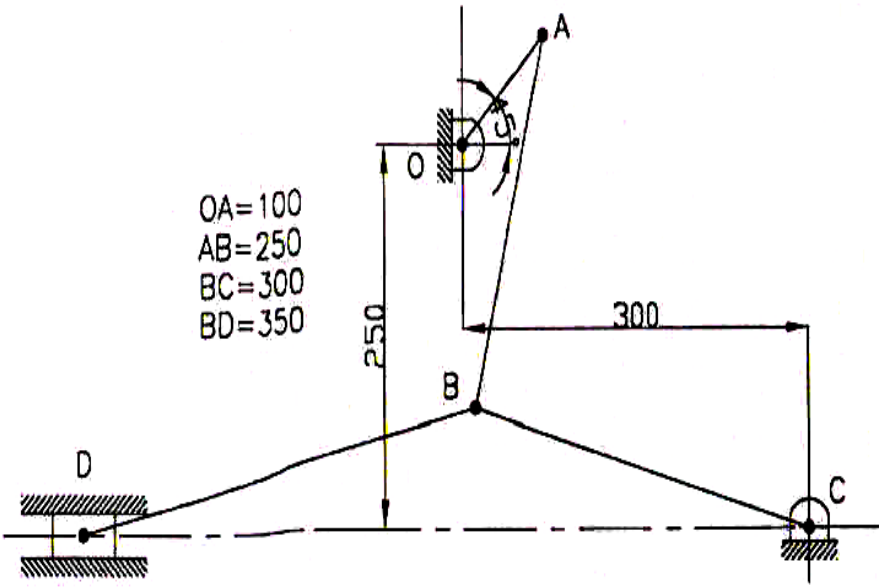

Figure – 2 [Q.3 (c)]