Seat No.: _____ Enrolment No._____

GUJARAT TECHNOLOGICAL UNIVERSITY

BE - SEMESTER–V(New) • EXAMINATION – WINTER 2016

Subject Code:2150909 Date:24/11/2016

Subject Name:Control System Engineering

Time:10:30 AM to 01:00 PM Total Marks: 70

Instructions:

1. **Attempt all questions.**
2. **Make suitable assumptions wherever necessary.**
3. **Figures to the right indicate full marks.**

			MARKS
Q.1		**Short Questions**	**14**
	1	In _____ system output is independent of Control input.	
	2	Field control DC motor is an example of _____system.	
	3	Capacitance in force current analogy is analogous to _____	
	4	_____ Signal become zero when the feedback signal and reference signal are equal.	
	5	Give the types of feedback.	
	6	What type of feedback is employed in control system?	
	7	Define order of the system.	
	8	Define Linear system.	
	9	Define step signal	
	10	Define positive error coefficient	
	11	Define damping ratio	
	12	Define gain cross over frequency	
	13	Define phase crossover frequency	
	14	Write mass son's gain formula	
Q.2	**(a)**	Explain transfer function and write its advantages and dis advantages	**03**
	(b)	Give difference between open loop and close loop control system	**04**
	(c)	Explain Type 0, Type 1 and Type 2 control system. Derive equation for the steady state error of the Type 2 control system for step, ramp and parabolic input.	**07**
		OR	
	(c)	Draw a schematic diagram of armature controlled DC motor and its block diagram with closed loop. Derive the transfer function for armature controlled DC motor.	**07**
Q.3	**(a)**	Define following terms in relation of signal flow graph: source node, forward path and non-touching loops	**03**
	(b)	Briefly discuss the mathematical model of a thermal system.	**04**
	(c)	Obtain the transfer function of the system shown in figure 1 using block diagram reduction techniques.	**07**
		OR	
Q.3	**(a)**	Write a note on state variable approach verses the classical approach of transfer function for the analysis of control systems.	**03**

	(b)	Obtain the transfer function of the system shown in figure 2 using Mason's gain formula.	**04**
	(c)	For the mechanical system shown in figure -3 obtain F-V analogous electrical network.	**07**
Q.4	**(a)**	Define : rise time, peak over shoot and settling time	**03**
	(b)	Explain correlation between time domain and frequency domain.	**04**
	(c)	Derive necessary equation and Draw diagram for step response of a second order control system.	**07**
		OR	
Q.4	**(a)**	Define: Phase margin and Gain margin.	**03**
	(b)	Check the stability of the given characteristic equation using Routh's method. $S^5 + S^4 + 2S^3 + 2S^2 + 3S + 5 = 0$	**04**
	(c)	The open loop transfer function of a given second order system is given by$G(s) = 25/S(S+5)$. Determine damping ratio, natural frequency, delay time, rise time, settling time, and peak overshoot.	**07**
Q.5	**(a)**	Explain standard test signals used in the control system.	**03**
	(b)	For the second order system with unity feedback $G(S) = 200/S(S+8)$ Find the frequency domain specification.	**04**
	(c)	Sketch the Bode plots for the transfer function given below: $G(S)H(S) = \frac{10}{S(S+1)(S+10)}$Also find phase margin and gain margin.	**07**
		OR	
Q.5	**(a)**	Briefly explain polar plots and its significance.	**03**
	(b)	State and explain nyquist stability criteria	**04**
	(c)	Explain rules for construction of Root locus	**07**

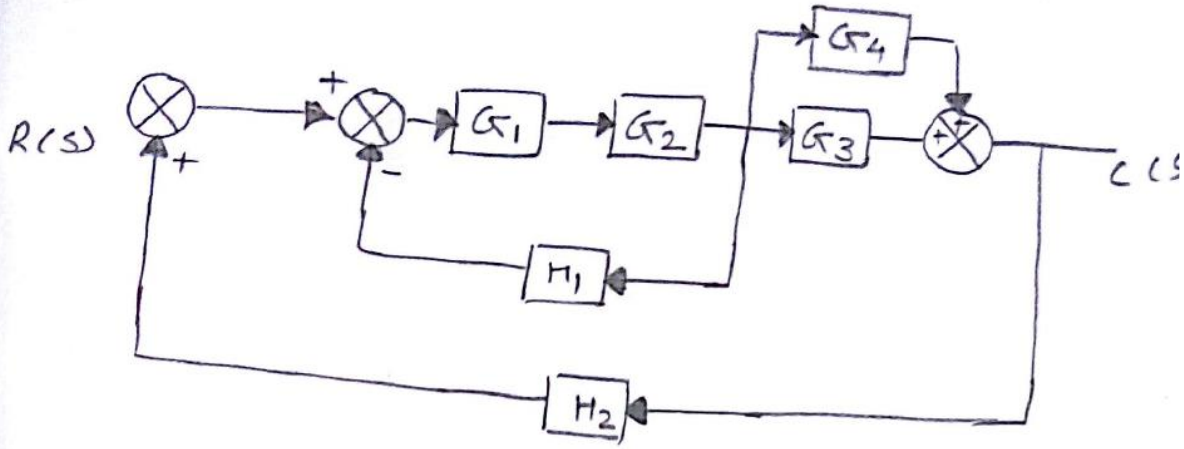

FIGURE - 1

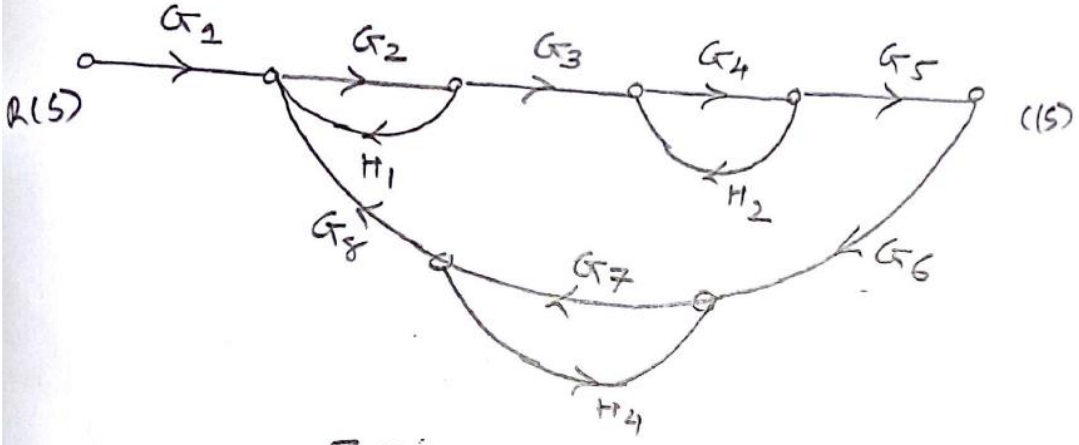

FIGURE - 2.

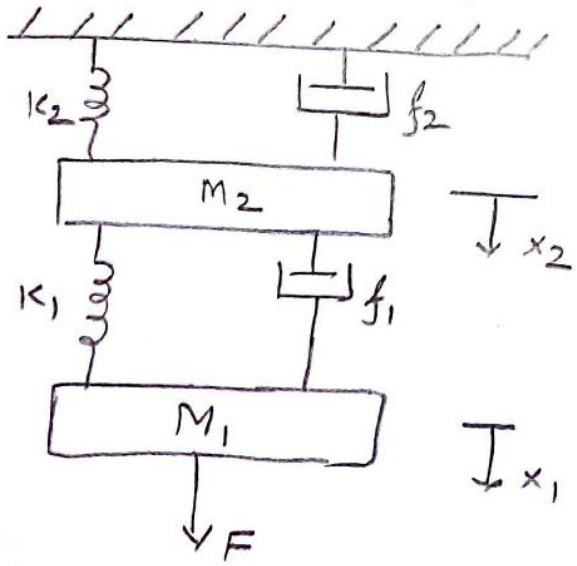

Figure - 3.