Seat No.: _____ Enrolment No._____

GUJARAT TECHNOLOGICAL UNIVERSITY

BE - SEMESTER–V(New) • EXAMINATION – WINTER 2016

Subject Code:2152507 **Date:17/11/2016**

Subject Name:Tool Engineering

Time:10:30 AM to 01:00 PM **Total Marks: 70**

Instructions:

1. **Attempt all questions.**
2. **Make suitable assumptions wherever necessary.**
3. **Figures to the right indicate full marks.**

			MARKS
Q.1		**Short Questions**	**14**
	1	Define a Jig.	
	2	List the types of drill bushes.	
	3	Define Punch Plate.	
	4	Define Deep Drawability.	
	5	Name the two systems of tool designation.	
	6	Name the factors that contribute to flank wear.	
	7	Define chip breakers.	
	8	Define broaching allowance.	
	9	Define Tool Design	
	10	Name various types of Cutting Fluids.	
	11	Name Temperature measurement techniques in machining.	
	12	Give selection parameters for Cutting Tool materials.	
	13	List common turning fixtures	
	14	Define "Blanking" operation.	
Q.2	**(a)**	Discuss importance of Tool Design in Process Planning.	**03**
	(b)	List & explain types of cutting fluids.	**04**
	(c)	Discuss methods of reducing cutting forces in Press Operation.	**07**
		OR	
	(c)	The symmetrical-cup work piece shown in figure (1) is to be made from steel 0.8 mm thick. Make the necessary calculations for designing the drawing die for this part.	**07**

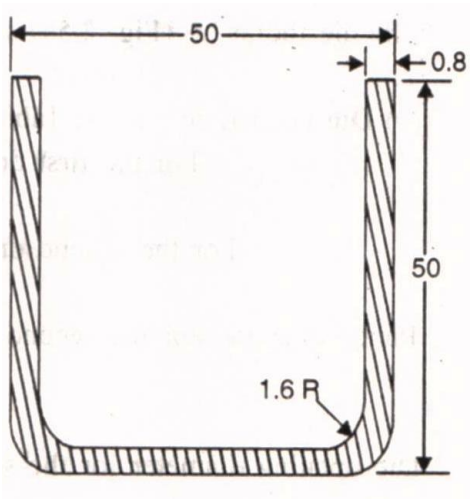

Figure-1

Q.3	**(a)**	State design principles for location purpose.	**03**
	(b)	What is strip layout? Discuss with neat sketch.	**04**

(c) Design & draw drilling Jig for drilling hole in the component shown in figure (2). **07**

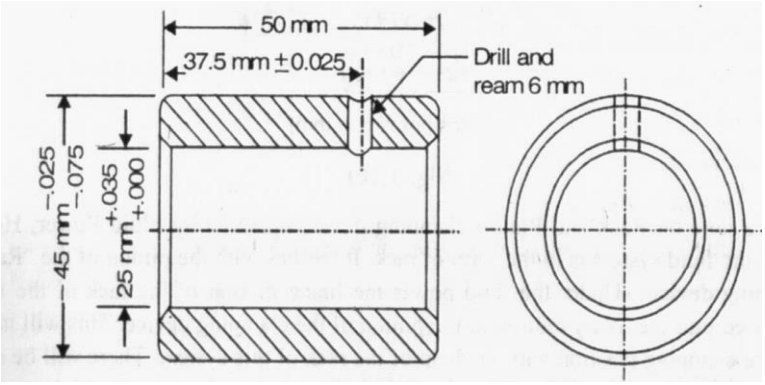

Figure-2

OR

Q.3 **(a)** Explain 3-2-1 Principle of Location with neat sketch. **03**

(b) Discuss various types of Tool wears. **04**

(c) Design & draw drilling Jig for drilling holes in the component shown in figure (3). **07**

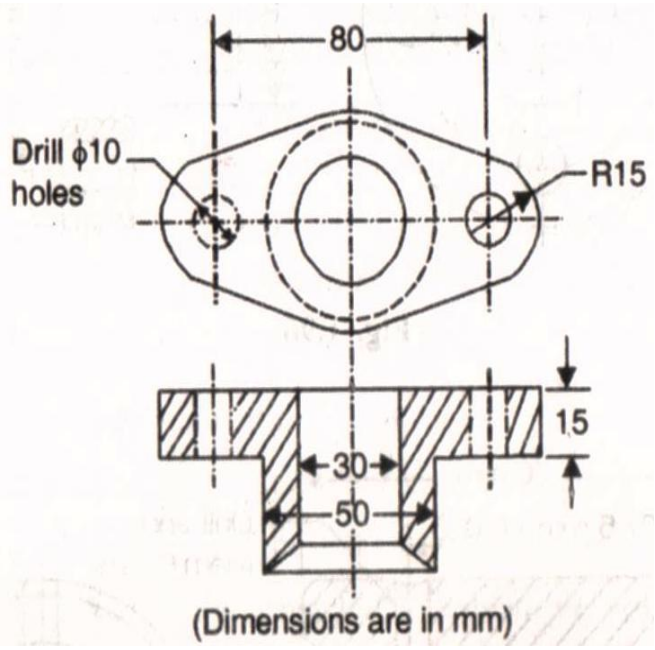

Figure-3

Q.4 **(a)** State functions of cutting fluids. **03**

(b) With the help of a neat sketch, discuss the principal surfaces & planes in metal cutting. **04**

(c) Explain the various elements of a single-point cutting tool with the help of a neat diagram. **07**

OR

Q.4 **(a)** Discuss the general problems of cutting tool design **03**

(b) Explain how to apply clearance in Punch & Die with neat sketches. **04**

(c) Differentiate between Orthogonal & Oblique cutting. **07**

Q.5 **(a)** Explain use & operation of the “C clamp” **03**

(b) How will you select cutting tool material? Explain. **04**

(c) What are the different sources and areas of heat generation **07**

during metal cutting? Explain.

OR

Q.5	**(a)**	Discuss the various types of chip breakers.	**03**
	(b)	List types of cutting tool materials & explain any one.	**04**
	(c)	Discuss the following design features of a broach: (i) Rake & relief angles, (ii) Depth of cut per tooth, (iii) width of land, (iv) depth of cutting tooth,	**07**