Seat No.: _____ Enrolment No._____

GUJARAT TECHNOLOGICAL UNIVERSITY

BE – SEMESTER – VI (NEW).EXAMINATION – WINTER 2016

Subject Code: 2160908 **Date: 24/10/2016**

Subject Name: Electrical Power system – II

Time: 10:30 AM to 01:00 PM **Total Marks: 70**

Instructions:

1. **Attempt all questions.**
2. **Make suitable assumptions wherever necessary.**
3. **Figures to the right indicate full marks.**

Q.1	**(a)**	Derive long transmission equivalent π model.	**07**
	(b)	Determine the voltage, current and power factor at the sending end of a 3 phase, 50 Hz, overhead transmission line 160 km long delivering a load of 100 MVA at 0.8 pf lagging and 132 KV to a balanced load. Resistance per km is 0.16Ω, inductance per km is 1.2 mH and capacitance per km conductor is 0.0082μF. Use nominal π method.	**07**
Q.2	**(a)**	Draw & explain receiving end power circle diagram.	**07**
	(b)	Two generators G1 and G2 are rated 15 MVA, 11KV and 10MVA, 11KV respectively. The generators are connected to a transformer shown in fig.1. Calculate the subtransient current in each generator where a three phase fault occurs on the high voltage side of the transformer. Choose a base 15 MVA.	**07**
		OR	
	(b)	A generating station consists of two 100 MVA generators with 6% reactance each and one 150 MVA generator with 8% reactance as shown in fig. 2. These generators are connected to a common busbar from which loads are taken through a number of circuit breaker on (i) low voltage side and (ii) on high voltage side. Take base power 150 MVA.	**07**
Q.3	**(a)**	Write note on Selection of a circuit breaker.	**07**
	(b)	Explain the importance of bus impedance matrix in fault calculation.	**07**
		OR	
Q.3	**(a)**	Explain Type-2 modification of Zbus building algorithm.	**07**
	(b)	Discuss principle of symmetrical components. Derive the necessary equations to convert: (i) phase quantities into symmetrical components (ii) symmetrical components in to phase quantities.	**07**
Q.4	**(a)**	Draw the positive, negative and zero sequence networks of the power system network as shown in Fig. 3.	**07**
	(b)	A 50 MVA, 11 KV, synchronous generator has a subtransient reactance of 20%. The generator supplies two motors over a transmission line with transformers at both ends as shown in fig. 4. The motors have rated inputs of 30 and 15 MVA, both 10 KV, with 25% subtransient reactance. The three-phase transformers are both rated 60 MVA, 10.8/121 KV, with leakage reactance of 10% each. Assume zero-sequence reactance for the generator and motors of 6% each. Current limiting reactors of 2.5 ohms each are connected in the neutral of the generator and motor no 2. The zero sequence reactance of the transmission line is 300 ohms. The series reactance of the line is 100 Ω. Draw the positive, negative and zero sequence networks. Assume that the negative sequence reactance of each machine is equal to its subtransient reactance. Assume base power 50 MVA and base voltage 11KV.	**07**
		OR	

Q.4	**(a)**	Prove that for a fully transposed line, the zero sequence impedance is much higher than positive or negative sequence impedance.	**07**
	(b)	Fig. 5 shows a three phase generator in which phases b and c are short circuited and connected through an impedance Z_f to phase a. Draw equivalent sequence network.	**07**
Q.5	**(a)**	List and Describe factors affecting corona. Outline different methods to reduce corona.	**07**
	(b)	Derive the equation for attenuation of travelling waves.	**07**

OR

Q.5	**(a)**	Explain inductive interferences due to corona between Power and communication line.	**07**
	(b)	Explain overvoltage due to arcing ground.	**07**

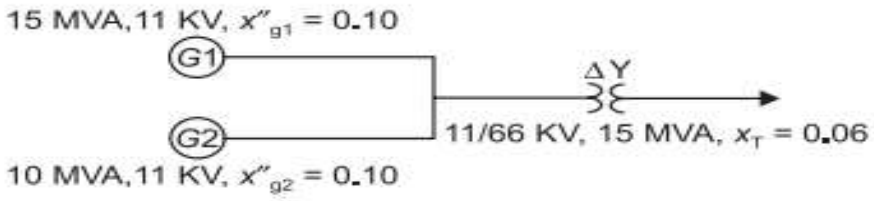

Fig. 1

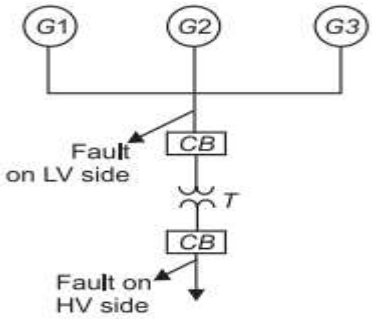

Fig. 2

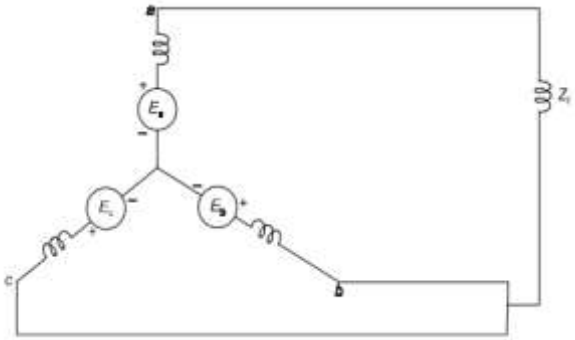

Fig 5

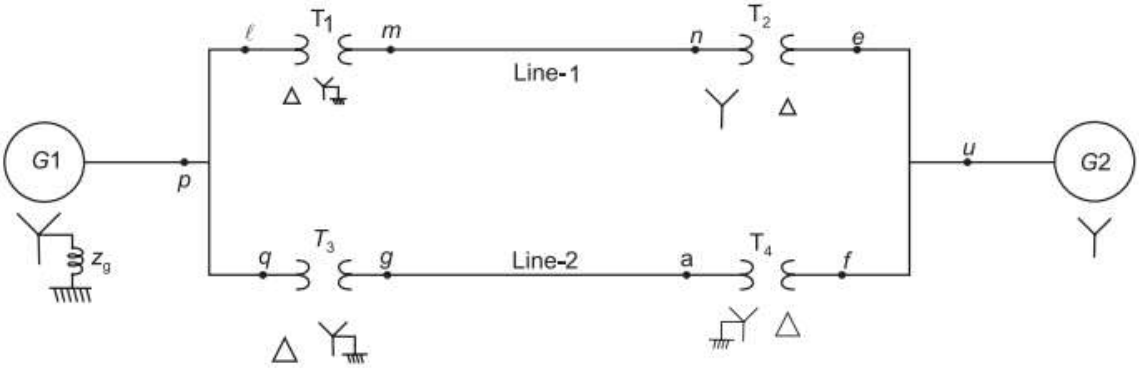

Fig. 3

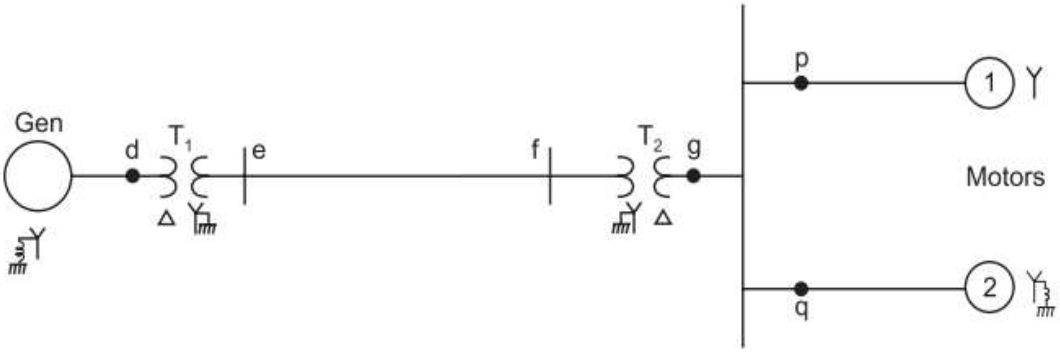

Fig. 4

****