Seat No.: _____ Enrolment No._____

GUJARAT TECHNOLOGICAL UNIVERSITY

BE - SEMESTER–VII(NEW) • EXAMINATION – WINTER 2016

Subject Code:2171903 **Date:25/11/2016**

Subject Name:Computer Aided Manufacturing

Time:10.30 AM to 1.00 PM **Total Marks: 70**

Instructions:

1. **Attempt all questions.**
2. **Make suitable assumptions wherever necessary.**
3. **Figures to the right indicate full marks.**

Q.1 **(a)** How does the structure of NC/CNC machine tools differ from conventional machine tools? **07**

(b) Draw and explain the CIM wheel and state the benefits of CIM. **07**

Q.2 **(a)** What is GT? Explain the methods of grouping parts into families in brief. **07**

(b) Describe with sketch the working and construction of recirculating ball screw used in CNC machine tools. **07**

OR

(b) Explain with examples **07**

i) Drilling canned cycle

ii) Cutter radius compensation

Q.3 **(a)** Apply the rank order clustering technique to the part machine incidence matrix in the following table to identify logical part families and machine groups. Parts are identified by letters and machines are identified numerically. **07**

Machines	Parts					
	A	**B**	**C**	**D**	**E**	**F**
1	1				1	
2				1		1
3	1	1				
4			1	1		
5		1			1	
6			1	1		1

(b) Explain with neat sketch axis designation for CNC turning center and vertical machining center. **07**

OR

Q.3 **(a)** What is FMS? List various flexibilities associated with FMS and explain any two in brief. **07**

(b) Explain various inputs to the Material Requirement Planning (MRP) system. **07**

Q.4 **(a)** Differentiate between Variant and Generative type CAPP stating their advantages. **07**

(b) Explain with neat sketch AS/RS system used in FMS. **07**

OR

Q.4 **(a)** What is a PLC? Explain major components of a PLC. List various applications of PLC. **07**

(b) Write a manual part program for finishing a forged component as shown in Figure 1 below. Assume appropriate values of cutting parameters. Assume 1mm material is to be removed radially from external diameter. **07**

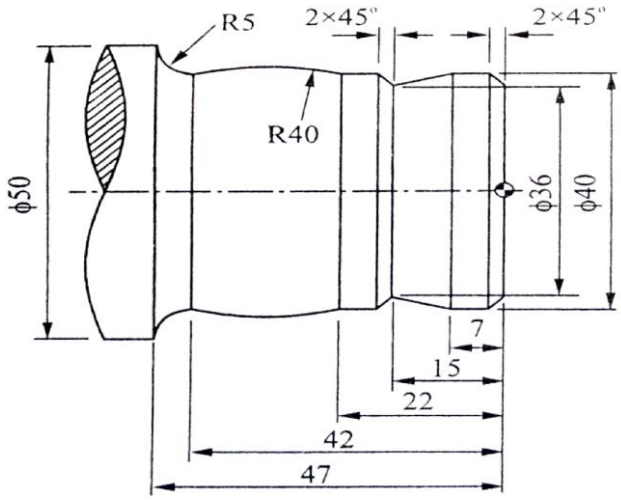

Figure 1

Q.5	**(a)**	How are sensors useful to robots? Explain visual and tactile sensors used in a robot.	**07**
	(b)	What are the major functions of process planning? What are the main problems associated with manual process planning?	**07**
		OR	
Q.5	**(a)**	List the robot configurations and explain any two with neat sketch.	**07**
	(b)	Explain in brief about the JIT philosophy.	**07**

****