Seat No.: _____ Enrolment No._____

GUJARAT TECHNOLOGICAL UNIVERSITY

BE - SEMESTER–VII(NEW) • EXAMINATION – WINTER 2016

Subject Code:2172008 Date:29/11/2016

Subject Name:Finite Element Analysis of Mechatronic Systems

Time:10.30 AM to 1.00 PM Total Marks: 70

Instructions:

1. **Attempt all questions.**
2. **Make suitable assumptions wherever necessary.**
3. **Figures to the right indicate full marks.**

Q.1 **(a)** Explain general steps of the Finite Element Method in detail. **07**

(b) Derive Element Stiffness Matrix for a Spring Element. **07**

Q.2 **(a)** Explain local and global coordinate system for truss element? Derive the expression for stiffness and stress in truss element. **07**

(b) Derive the stiffness matrix for the spring system shown in Fig. 1 and determine the displacements of nodes take k_1=k_2= 40 N/mm, k_3 = 60 N/mm, k_4 = 90 N/mm, P_2 = 100 N and P_3 = 60 N. **07**

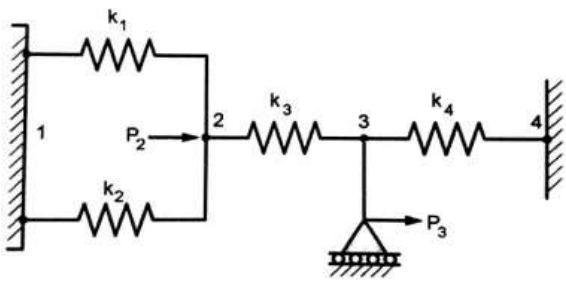

Fig. 1

OR

(b) Fig. 2 shows a cluster of four springs. The assembly is fixed at the points A and D while the forces of 20 N and 60 N are applied at the B and C respectively. Using the finite element method, determine: **07**

(i) The deflection of each spring; and

(ii) The reaction force at support.

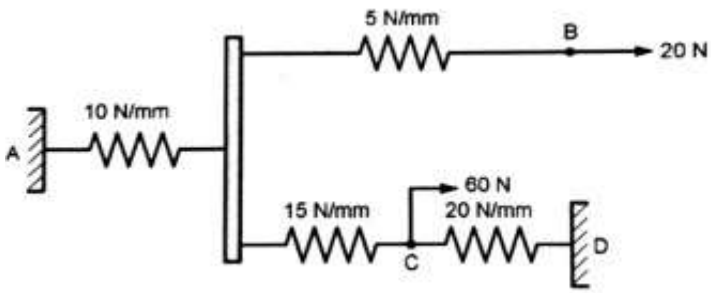

Fig. 2

Q.3 **(a)** Explain the shape function of constant strain triangular element. **07**

(b) Evaluate the stiffness matrix for the element shown in Fig.3. The coordinates are shown in units of inches. Assume plane stress conditions. Let E = 30 x 10^6 psi, n = 0:25, and thickness t = 1 in. Assume the element nodal displacements have been determined to be u1 = 0:0, v1 = 0:0025 in., u2 = 0:0012 in., v2 = 0:0, u3 = 0:0, and v3 = 0:0025 in. determine the element stresses. **07**

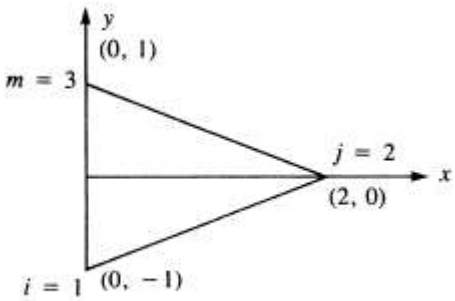

Fig. 3(Plane stress element for stiffness matrix evaluation)

OR

Q.3 **(a)** Give Isoparametric formulation of the Bar Element Stiffness Matrix. **07**

(b) Considering the bar shown in Fig.4 an axial load P= 200 x 10^3 N is applied as shown. Using the penalty approach for handling boundary condition. Do the following. **07**

(a) Determine the nodal displacements.
(b) Determine the stress in each material.
(c) Determine the reaction forces.

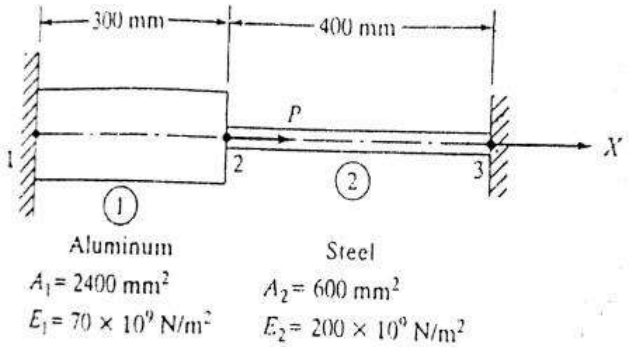

Fig. 4

Q.4 **(a)** Fig. 5 shows a truss consisting of three elements whose AE/L value is 1000 N/mm. Calculate the deflection at node 2. **07**

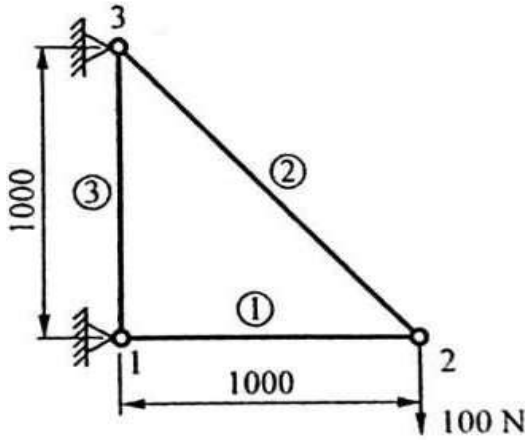

Fig. 5

(b) Give the derivation of the Linear-Strain Triangular Element Stiffness Matrix. **07**

OR

Q.4 **(a)** Give Potential Energy Approach to Derive Beam Element Equations. **07**

(b) For the beam and loading shown in Fig .6 determine (1) the slopes at 2 and 3 and (2) the vertical deflection at the midpoint of the distributed load. **07**

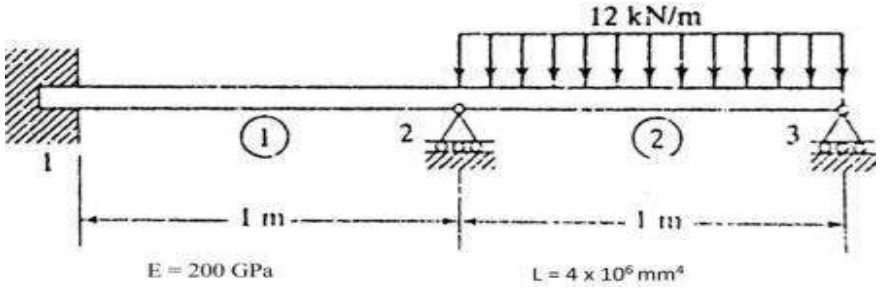

Fig. 6

Q.5 **(a)** Define the following terms with suitable examples : **07**

(1) Isoparametric element.

(2) Axissymmetric analysis.

(b) Give name of different types of 1D and 2D elements with their applications. **07**

OR

Q.5 **(a)** Answer following: **07**

(1) Differentiate between plane stress and plane strain.

(2) Give four examples of practical application of axisymmetric element.

(b) Explain evaluation of eigenvalues and eigenvectors in dynamic consideration **07**

****