Seat No.: _____ Enrolment No._____

GUJARAT TECHNOLOGICAL UNIVERSITY

B. E. - SEMESTER – IV • EXAMINATION – WINTER 2012

Subject code: 140101 **Date: 28/12/2012**

Subject Name: Aircraft structure-1

Time: 02.30 pm - 05.00 pm **Total Marks: 70**

Instructions:

1. **Attempt any five questions.**
2. **Make suitable assumptions wherever necessary.**
3. **Figures to the right indicate full marks.**

Q.1	**(a)**	Explain the Principle of Super position with its statement.	**04**
	(b)	Find static indeterminacy of structures given in figure 1 (a, b, c, d)	**04**
	(c)	Find kinematic indeterminacy of structures given in figure 1 (a, b, c, d)	**04**
	(d)	A simply supported beam is subjected to a central point load. If the slope is 0.3^0 at support due to the effect of loading, calculate deflection at center. length of the beam is 5 m.	**02**
Q.2	**(a)**	Write the different required characteristics of the Aircraft structure. Why hollow section and I-sections are preferred for aircraft structure?	**07**
	(b)	A space-curved bar of circular in cross section is loaded as shown in figure 2. Calculate maximum and Minimum stresses at the critical section p-q.	**07**
		OR	
	(b)	Analyse the plane frame as shown in figure 3. Draw shear force diagram, Bending moment diagram, and axial force diagram.	**07**
Q.3	**(a)**	Give the relation between bending moment, shear force, rate of loading, slope and deflection.	**02**
	(b)	Explain Conjugate beam method with its all support conditions.	**05**
	(c)	Calculate Slope at support and deflection at point center for the beam as shown in figure 4 using Double integration method. Take EI = 24000 kN.m^2.	**07**
		OR	
Q.3	**(a)**	Which points should be take care while using Macaulay's Method.	**02**
	(b)	Find Slope and Deflection at the free end of the cantilever beam subjected to uniformly distributed load over the entire span.	**05**
	(c)	Calculate slope and deflection at point C for the beam as shown in figure 5 using conjugate beam method. Take EI = 24000 kN.m^2.	**07**
Q.4	**(a)**	Define strain energy, resilience and modulus of resilience	**03**
	(b)	Derive the equation of the strain energy stored in a member due to axial load.	**04**
	(c)	A simply supported beam AB of span 5m carries a uniformly distributed load of 15 kN/m over its entire span. Determine the strain energy stored in the beam. Take E = 2 x 10^5 N/mm^2 and I = 10 x 10^7 mm^4.	**07**
		OR	
Q.4	**(a)**	Define Crippling load, Slenderness ratio, Crushing load	**03**
	(b)	Derive Euler's crippling load formula for the long column fixed at both ends.	**04**
	(c)	A cast iron column of hollow section has to transmit load of 550 kN. Calculate the external diameter if the column is 6 meters long, both ends fixed. The thickness of metal is to be 20mm. use Rankine's formula. Taking fc = 550 N/mm^2, Rankine's constant α = 1/1600 and factor of safety is 5.	**07**

Q.5	**(a)**	Explain about plane-stress condition and derive expressions of equilibrium equations.	**07**
	(b)	Enlist the common material properties required for aircraft structures. Explain about different materials for aircraft structure.	**07**

OR

Q.5	**(a)**	What do you mean by plane-strain condition? Explain about principle stresses with help of Mohr's circle.	**07**
	(b)	Compare Metallic material with composites.	**07**

****

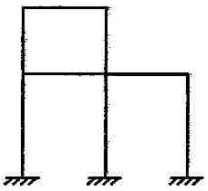

Fig. 1(a)

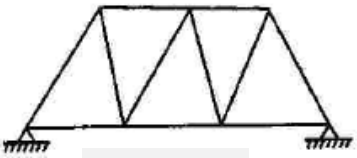

Fig. 1(b)

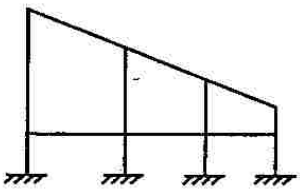

Fig. 1(c)

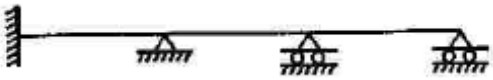

Fig. 1(d)

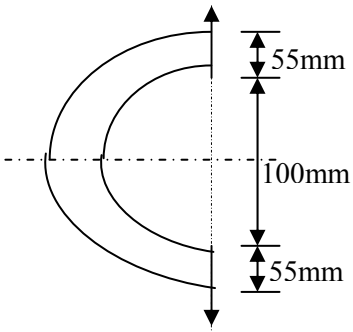

25 kN

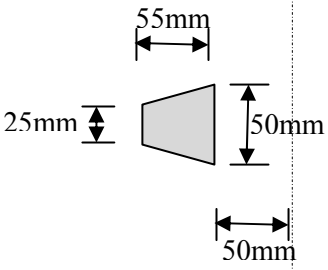

Fig. 2

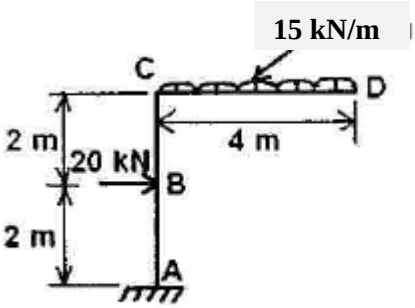

Fig. 3

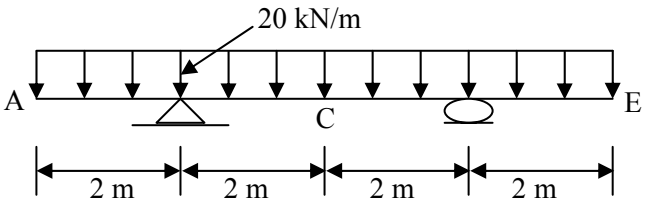

Fig. 4

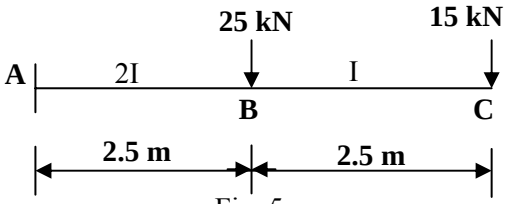

Fig. 5