Seat No.: _____ Enrolment No._____

GUJARAT TECHNOLOGICAL UNIVERSITY

B. E. - SEMESTER – IV • EXAMINATION – WINTER 2012

Subject code: 141403 **Date: 28/12/2012**

Subject Name: Materials and Manufacture of Food Equipment

Time: 02.30 pm - 05.00 pm **Total Marks: 70**

Instructions:

1. **Attempt any five questions.**
2. **Make suitable assumptions wherever necessary.**
3. **Figures to the right indicate full marks.**

Q.1 **(a)** Observe the figure given below and draw the following using appropriate scale by first angle method: **07**

(i) Front view (i) Top view (iii) Sectional front view.

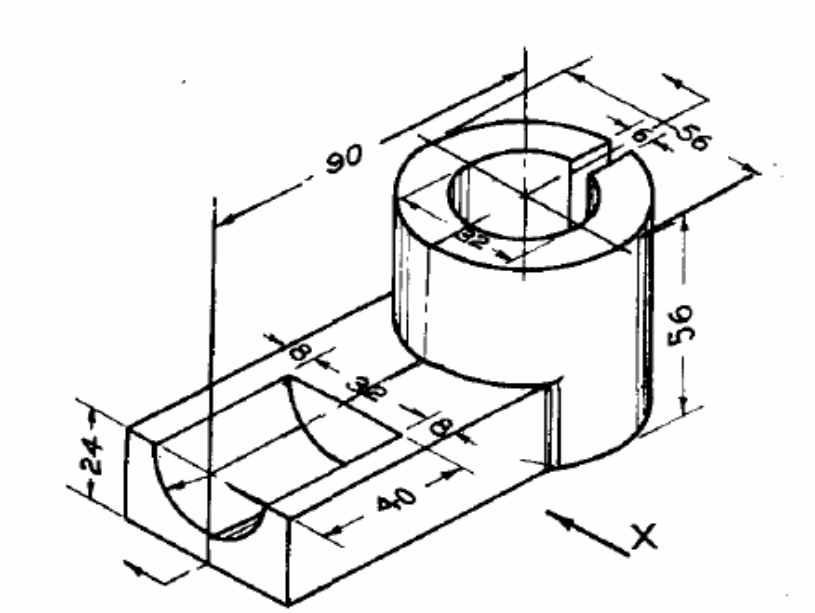

(b) What is the difference between annealing and tempering? Discuss different annealing process in detail. **07**

Q.2 **(a)** Differentiate between single and multiple start threads with the help of a neat labeled diagram. The number of threads in a M25 external ISO metric screw thread bolt are 20 per inch. Calculate the following: **07**

(i) Slope of the screw in mm if it is a single start thread
(ii) Nominal diameter in mm.
(iii) Lead in mm if it is a double start thread.
(iv) Pitch in mm.

(b) Explain any two with the help of a neat labeled diagram and mention their engineering applications: **07**

(i) Socket and spigot joint. (ii) Gib-head key. (iii) Interference fit.

OR

(b) Explain any two with the help of a neat labeled diagram and mention their engineering applications: **07**

(i) Foundation bolts
(ii) Tolerance of straightness or flatness.

(iii) Right and left handed threads.

Q.3 **(a)** Draw neat sketches of any three types of prominent triangular threads. Mention threads angle and depth in each case. Take thread pitch as 20mm. **07**

(b) Write brief notes on the following: **07**

(i) Geometric tolerances and its types.
(ii) Plate heat exchangers and its applications.
(iii) Polymers and its uses in food industry.

OR

Q.3 **(a)** Draw neat sketches of the following indicating critical dimensions: **07**

(i) Acme thread (ii) Knuckle thread (iii) Buttress thread

(b) Answer the following questions briefly and to the point: **07**

(i) What are composite materials?
(ii) What are washers? Where are they used and why?
(iii) What are elastomers and rubbers?
(iv) Define thermosetting plastics and give examples.
(v) What are evaporators? State their types.
(vi) What is the purpose of assembly drawings?
(vii) What is Spot facing?

Q.4 **(a)** What is cooling curve? Explain iron allotropy in detail with diagram. Also discuss micro constituents of iron and steel. **07**

(b) Write short notes on the following: **07**

1. Puddle and Root
2. Porosity and Inclusion
3. Natural flame and Oxidizing flame
4. Rated current and Duty cycle

OR

Q.4 **(a)** What is phase diagram? List out the importance of heat treatments. Explain cooling curve with diagram. **07**

Q.4 **(b)** Explain different engineering properties of materials. Discuss hardness, toughness, ductility, fatigue and creep. **07**

OR

Q.5 **(a)** What is Plate Heat Exchanger (PHE)? Why it is popular in food industry? With the help of a neat diagram show different parts of plates in PHE. **07**

(b) Explain the principle of tungsten inert gas welding with diagram. Also show different types of welding joints with diagram. **07**

OR

Q.5 **(a)** What is the application of evaporators in food industry? Differentiate between single effect and multiple effect evaporators. With the help of a neat diagram indicate different methods of feeding in evaporators. **07**

(b) Differentiate between nitriding and cyaniding. Discuss different methods of carburizing. **07**

****