Seat No.: _____ Enrolment No._____

GUJARAT TECHNOLOGICAL UNIVERSITY

BE – SEMESTER V • EXAMINATION – WINTER - 2012

Subject code: 150103 **Date: 17-01-2013**

Subject Name: Aircraft structure II

Time: 02:30 pm to 05:00 pm **Total Marks: 70**

Instructions:

1. **Attempt all questions.**
2. **Make suitable assumptions wherever necessary.**
3. **Figures to the right indicate full marks.**

Q.1	**(a)**	State and explain with usual notations Castigliano's first theorem	**07**
	(b)	Explain about unsymmetrical bending and derive the equation of unsymmetrical bending stress using rectangular coordinates.	**07**
Q.2	**(a)**	Explain Flight envelop diagram.	**07**
	(b)	Find deflection at point B and C for the cantilever beam as shown in figure 1 using unit load method. Take EI=32000 kN.m^2.	**07**
		OR	
	(b)	Find horizontal deflection at support for the truss shown in figure.2 Castigliano's first theorem. Take EI= 2 X 10^5 N/mm^2, A= 450 mm^2.	**07**
Q.3	**(a)**	Find horizontal deflection at point B for the frame shown in figure. 3 using Castigliano's first theorem. Take EI= 60000 kN.m^2.	**07**
	(b)	Obtain flexibility matrix for the beam as shown in figure. 4	**07**
		OR	
Q.3	**(a)**	A quarter circular ring beam of radius 'r', supports a concentrated load 'P' at the free end, Calculate vertical & horizontal deflection at free end.	**04**
	(b)	Analyze the beam as shown in figure. 5 using stiffness system approach.	**10**
Q.4	**(a)**	Enlist characteristics of Flexibility matrix	**03**
	(b)	Analyze the truss as shown in figure. 6 using flexibility system approach.	**11**
		OR	
Q.4	**(a)**	Differentiate Flexibility and Stiffness	**03**
	(b)	Analyze the beam shown in figure. 7 using Castigliano's second theorem.	**11**
Q.5	**(a)**	A box beam as shown below is subjected to a vertical shear force of 300 kN. The bending Analysis, neglecting bending stress gives axial stiffener between cross section 1.2 cm apart as Shown in figure 8. Determine the shear flow in the box beam.	**07**
	(b)	Explain about limit load for load factor determination.	**07**
		OR	
Q.5	**(a)**	Find out shear centre of thin walled section as shown in Fig. 9. Assume constant thickness throughout the section.	**07**
	(b)	Explain thin walled open sections & closed sections and define shear center with its Practical significance.	**07**

****

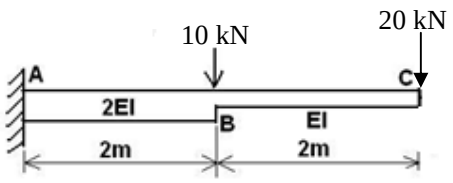

Figure 1

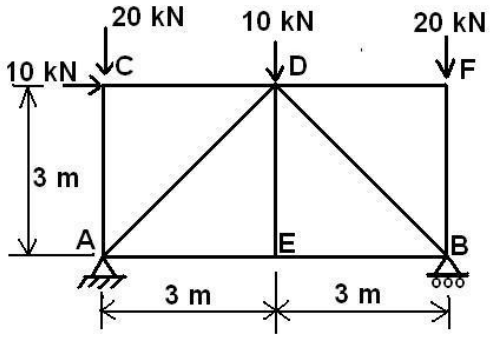

Fig. 2

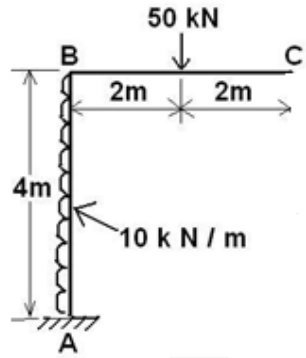

Fig. 3

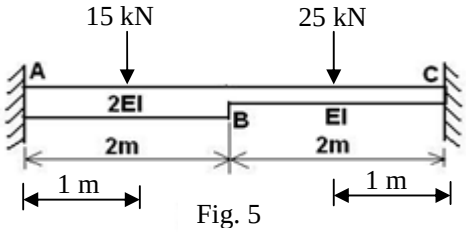

Fig. 5

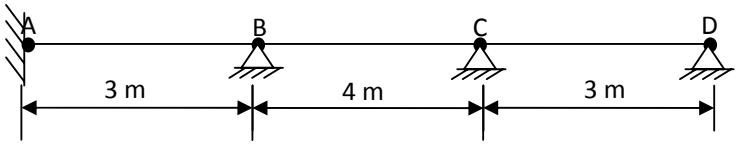

Figure 4

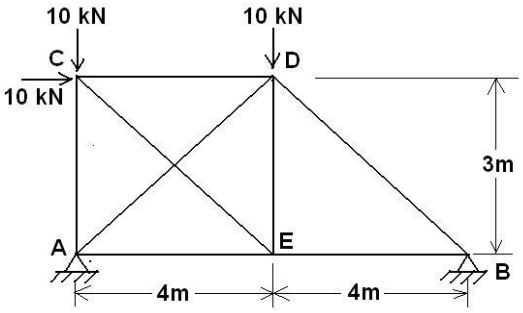

Figure 6

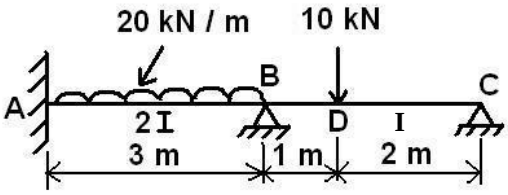

Figure 7

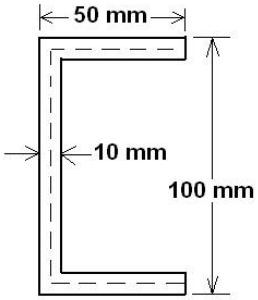

Figure 9

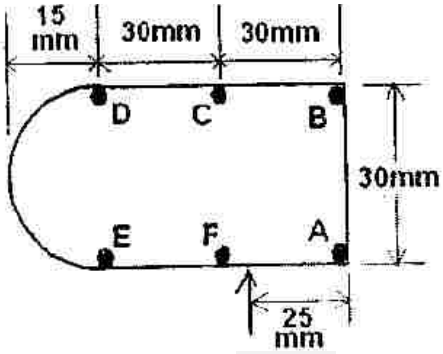

Fig. 8(a)

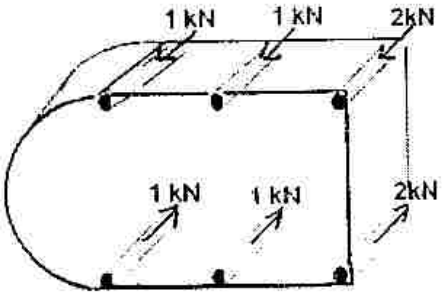

Fig. 8 (b)