Seat No.: _____ Enrolment No._____

GUJARAT TECHNOLOGICAL UNIVERSITY

BE – SEMESTER V • EXAMINATION – WINTER - 2012

Subject code: 152504 Date: 16-01-2013

Subject Name: Dynamics of Machines & Production Engineering Drawing

Time: 02:30 pm to 05:00 pm Total Marks: 70

Instructions:

1. **Attempt all questions.**
2. **Make suitable assumptions wherever necessary.**
3. **Figures to the right indicate full marks.**
4. **Use answer book for analytical and drawing sheet for graphical solutions & Production Engg. Drawing's answers. [Follow first angle projection method]**

Q.1 (a) The following data are relative to a horizontal single cylinder four stroke cycle gas engine working on the Otto cycle: **07**

Maximum explosion pressure = 3.15 N/mm^2 ,
Index of expansion curve = 1.3, Ratio of compression = 5.5,
Stroke = 525 mm, The ratio of C.R. length to crank length = 4.571,
Mass of reciprocating parts = 180 kg; Speed = 180 R.P.M.,
Back pressure = 0.1 N/mm^2.
Estimate the crank effort when the crank has rotated through 60^0 from inner dead centre during expansion stroke. Use analytical method.

(b) The following data relate to a shaft held in long bearings: **07**

Length of shaft = 1.2 m, Diameter of shaft = 14 mm,
Mass of a rotor at mid-point =16 kg, Eccentricity of C.G. of rotor = 0.4 m,
Modulus of elasticity of shaft–material = 200 GN/m^2, Permissible stress for shaft-material = 70x 10^6 N/m^2. Determine the critical speed of the shaft & the range of speed over which it is unsafe to run the shaft. Assume shaft to be massless.

Q.2 (a) A vertical double acting steam engine has a cylinder bore of 300 mm and stroke of 450 mm. It runs at 200 r.p.m. The reciprocating parts have a mass of 225 kg and the piston is 50 mm in diameter. The connecting rod is 1.2 m long. When the crank has turned through 125^0 from the T.D.C., the steam pressure above the piston is 30 kN/m^2 and below it is 1.5 kN/m^2.Calculate the effective turning moment on the crank shaft. **07**

(b) Derive expressions for displacement, velocity and acceleration of piston in a reciprocating engine. Assume notations as: r = radius of crank, **07**
l = length of connecting rod, n = l/r, θ = angle turned through by crank from IDC, ω = angular velocity of crank.

OR

(b) Derive an expression for natural frequency using Dunkerley's method. **07**

Q.3 (a) A machine part having mass of 2.5 kg vibrates in a viscous medium. A harmonic exciting force of 30 N acts on the part and causes a resonant amplitude of 14 mm with a period of 0.22 seconds. Find the damping coefficient. **07**
If the frequency of exciting force is changed to 4 Hz, determine the increase in the amplitude of the forced vibrations upon the removal of the damper.

(b) A two cylinder V-engine has the cylinders set at an angle of 45^0, with both pistons connected to the single crank. The crank radius is 62.5 mm and the connecting rods are 275 mm long. The reciprocating mass per line is 1.5 kg and the total rotating mass is equivalent to 2 kg at the crank radius. A balance mass fitted opposite to the crank is equivalent to 2.25 kg at a radius of 87.5 mm. Determine **07**

for an engine speed of 1800 r.p.m.; the maximum and minimum values of the primary & secondary forces due to the inertia of reciprocating and rotating masses.

OR

Q.3 (a) Five masses A,B,C, D and E revolve in the same plane at equal radius of 200 mm. masses of A, B and C are respectively 30 kg, 15 kg and 24 kg. The angular positions of B, C, D and E measured in the same sense from A are 60^0, 135^0, 210^0 and 270^0 respectively. Find masses D and E for complete balance. Use analytical method. **07**

(b) Derive the equation for Equivalent length 'L_{eq}' of shaft with Torsional vibrations & two rotors A and B attached as shown in figure 1. **07**

Q.4 (a) Compare the flywheel with a governor. Explain the method of determining the maximum fluctuation of energy for a multi-cylinder engine with help of its turning moment diagram. **07**

(b) Write names of assembly drawings used in various industries according to different uses in production engineering drawing. **07**

OR

Q.4 (a) Four masses of magnitude 2 kg, 3.5 kg, 4 kg and 2.5 kg are each attached to cranks of 20 mm radius and revolve in planes A, B, C and D respectively. The angular positions of cranks B, C and D with respect to crank in plane A are 75^0, 135^0 and 240^0 taken in order. The distances of planes B, C and D from A are 200 mm, 600 mm and 800 mm respectively. Find the magnitude & position of the balance masses required mid-way between planes A & B and planes C & D to be located at a radius of 24 mm. Use graphical method. **07**

Q.4 (b) The firing order of 6-cylinder 4-stroke vertical inline engine is A-D-B-F-C-E. The cranks are equispaced angularly. The piston stroke is 0.5 m and length of connecting rod is 0.75 m. The cylinders are placed from A to F in succession at 0.3 m, 0.36 m, 0.44 m, 0.3 m and 0.3 m apart respectively. The mass of reciprocating parts for each cylinder is 30 kg and engine runs at 1200 r.p.m. Determine with reference to a central plane mid-way between cylinders C and D the unbalance forces and couples. Use graphical method. **07**

Q.5 (a) A vertical square prism, edge of base 45 mm and height 85 mm resting on its base in HP with a vertical face inclined at 60° to the VP is penetrated by a horizontal square prism edge of base 35 mm and 90 mm long, having one of its rectangular faces inclined at 30° to VP. The axes of both the prisms bisect each other. Draw the projections showing lines of intersection. **07**

(b) (i)Draw Hexagonal Headed Bolt with Hex. Nut & a Washer (front & side views) duly assembled for bolt size of M30. Insert all calculated dimensions in the views drawn. **04**

(ii) Draw commonly used Geometric dimensioning & Tolerancing symbols for production engineering drawings. **03**

OR

Q.5 (a) (i)Draw missing line/s, full or dotted, in the orthographic views of the objects, shown in Figures 2 & 3 and indicate them by the letters M. L. Support your answer by freehand sketches of the isometric views of the objects, without which, no credit will be given for the answer. **04**

(ii) Draw neat sketch of various types of nuts & label them. **03**

(b) Figure 4 shows two views of an object. Draw Sectional front view and Left hand side view of the object. **07**

****

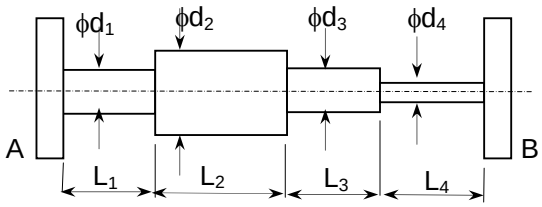

Figure 1 [OR Q. 3(b)]

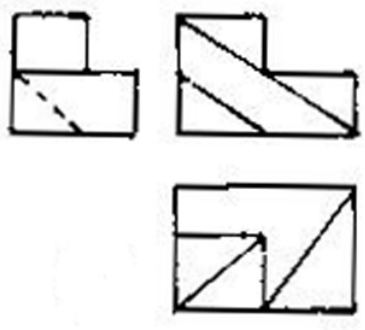
Figure 2 [OR Q. 5(a)]

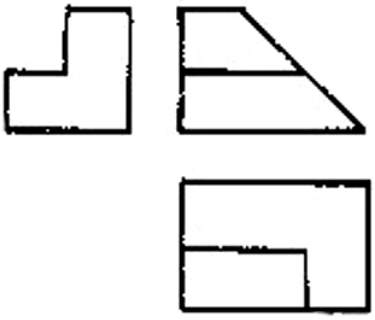
Figure 3 [OR Q. 5(a)]

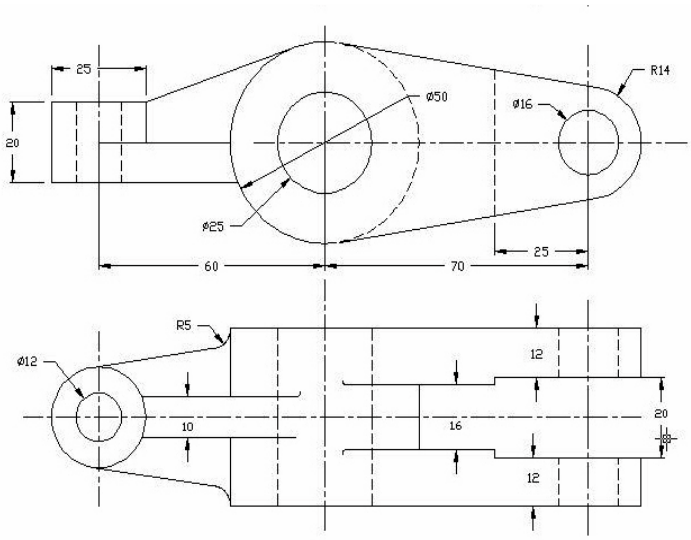

Figure 4 [OR Q. 5(b)]