Seat No.: _____ Enrolment No._____

GUJARAT TECHNOLOGICAL UNIVERSITY

B. E. - SEMESTER – VI • EXAMINATION – WINTER 2012

Subject code: 160304 **Date: 05/01/2013**

Subject Name: Bio-Medical Control Theory

Time: 02.30 pm - 05.00 pm **Total Marks: 70**

Instructions:

1. **Attempt any five questions.**
2. **Make suitable assumptions wherever necessary.**
3. **Figures to the right indicate full marks.**

Q.1 (a) Define following terms 07

1. Disturbance
2. Feedback
3. Feed forward system
4. Servomechanism
5. Regulating system
6. Control system
7. Pole , Zero and Characteristics equation

(b) Explain open loop and closed loop system with two example of each. 07

Q.2 (a) Write a short note on " Time Response". 07

(b) In RC series network, the value of R and C are 1MΩ & 1μF respectively. Obtain the expression for the current flowing in the circuit if it is supplied with an input of step voltage of 1V at t=0 07

OR

(b) Find the Vo(s)/ Vi(s), Assume gain of buffer amplifier as 1. 07

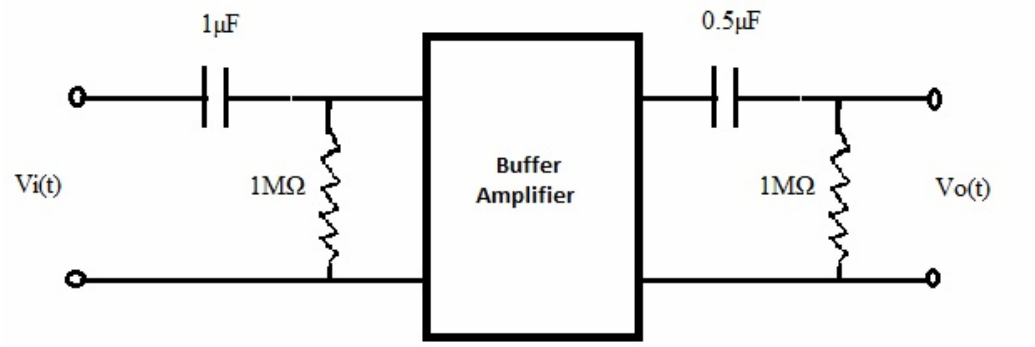

Q.3 (a) Obtain transfer function for the given system by using block reduction technique. 07

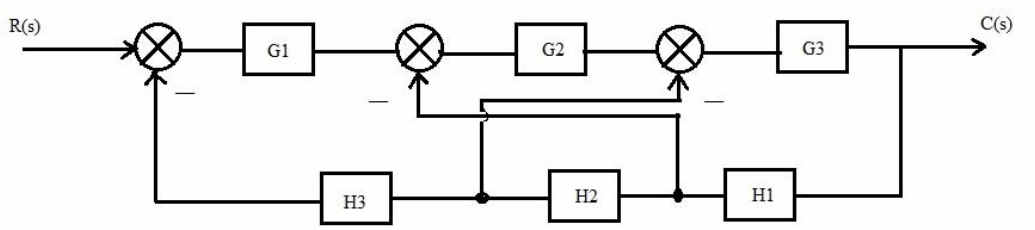

(b) Find the transfer function from given signal flow graph. 07

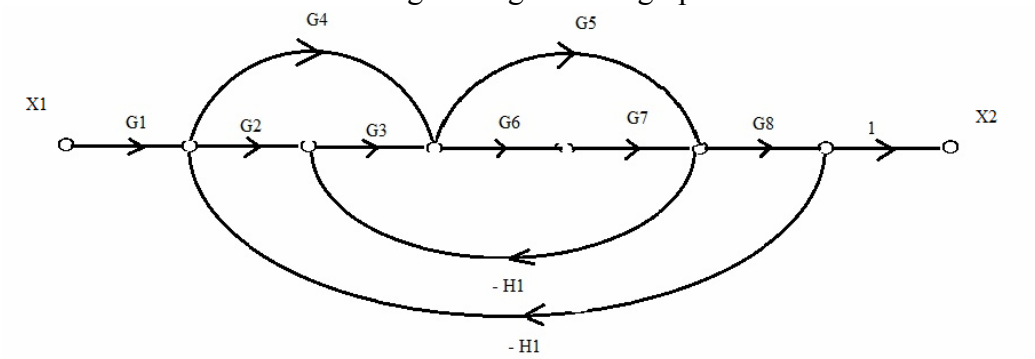

OR

Q.3 (a) What is analogous system? Establish force-current and force-voltage analogy. 07

(b) Find the response of the unit step input on first order system using a suitable example. 07

Q.4 (a) Derive a equation of unit step response of a second order system for an underdamped case. 07

(b) The overall transfer function of a unity feedback control system is given by $C(s) / R(s) = 10 / s^2 + 6s + 10$. Find: 1) Position error constant 2) Velocity error constant 3) The steady state error if the input is $r(t) = 1 + t + t^2$ 07

OR

Q.4 (a) Sketch the root locus for the system having $G(s)H(s) = K / s (s^2 + 4s + 1)$ 07

(b) For a unity feedback system $G(s)= 800(s + 2) / s^2 (s + 10) (s + 40)$, Sketch the bode plot, Comment on Stability. 07

Q.5 (a) For a system with characteristic equation 07
$F(s) = s^6 + 3s^5 + 4s^4 + 6s^3 + 5s^2 + 3s + 2=0$, examine stability.

(b) Sketch the bode plot for the system having 07
$G(s)H(s)= 512(s + 3)/ s (s^2 + 16s + 256)$

OR

Q.5 (a) Sketch the root locus for the system having $G(s)H(s) = K (s + 4) / s (s^2 + 2s + 2)$ 07

(b) Sketch the Nyquist plot for system with 07
$G(s)H(s)= (1 + 0.5s) / s^2 (1+0.1s) (1+0.02s)$, comment on stability

****