Seat No.: _____ Enrolment No._____

GUJARAT TECHNOLOGICAL UNIVERSITY

B. E. - SEMESTER – VI • EXAMINATION – WINTER 2012

Subject code: 161905 **Date: 07/01/2013**

Subject Name: Control Engineering

Time: 02.30 pm - 05.00 pm **Total Marks: 70**

Instructions:

1. **Attempt any five questions.**
2. **Make suitable assumptions wherever necessary.**
3. **Figures to the right indicate full marks.**

Q.1 (a) (1) Define the following term. **02**

I. Open loop control.

II. Close loop control.

(2) Obtain a system equation for the mechanical system shown in figure. **05**

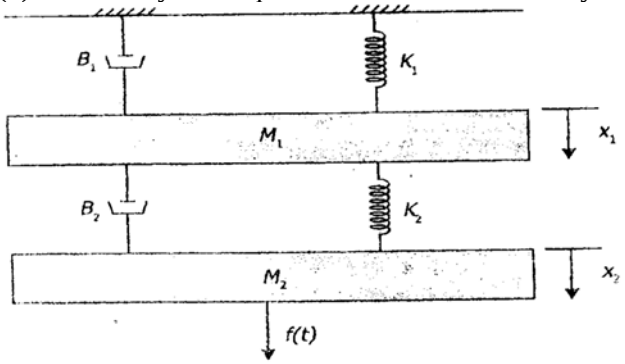

(b) Solve the block diagram shown in Figure Obtain its transfer function. **07**

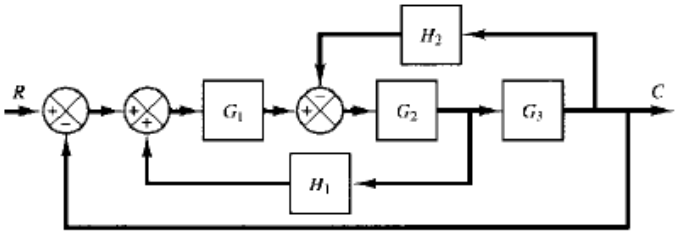

Q.2 (a) (1) What is the mathematical model? **02**

(2) Obtain Transient response of first order systems to unit step input and obtain the value of steady state error. **05**

(b) What is a signal flow graph? What are Properties of signal flow graph? State and explain Mason's gain formula for signal flow graph. **07**

OR

(b) Sketch the root loci for the following system. **07**

$$G(s) = \frac{K}{s(s+1)(s+2)}, \qquad H(s) = 1$$

P.T.O.

Q.3 **(a)** (1) Define the following term. **02**

I. Rise time.

II. Delay time.

(2) An unity feedback system has a loop transfer function **05**

$$G(s) = 10(S+1)/S(S+2)(S+5)$$

Determine:

I. Stability gain.

II. Step, ramp, parabolic error coefficient.

(b) Write a short note on state space representation of a control system. **07**

OR

Q.3 **(a)** (1) State 'Angle condition' and 'Magnitude condition' of root locus method. **02**

(2) Explain in detail about Proportional control action. **05**

(b) Define programmable logic controller. What are the components of PLC? State the Advantages & Disadvantages of it. **07**

Q.4 **(a)** (1) What is root locus method? **02**

(2) Write a short note on Adaptive Control System. **05**

(b) Describe a DC servomotor control system. Draw the simplified block diagram of the DC servo motor system. Derive the transfer function for the above system. **07**

OR

Q.4 **(a)** (1) Define Fuzzy Logic. **02**

(2) Compare hydraulic and pneumatic control system. **05**

Q.4 **(b)** Describe working of hydraulic proportional plus derivative controller and derive expression for its performance. **07**

Q.5 **(a)** (1) Define hydraulic system. **02**

(2) Write short note on Dashpots. **05**

(b) Describe working of hydraulic speed control for i.c. engine and derive expression for its performance. **07**

OR

Q.5 **(a)** (1) Define following term **02**

I. Proportional lag.

II. Controlled lag.

(2) Find the stability of control system having following characteristic equation. **05**

$$a(s) = s^6 + 4s^5 + 3s^4 + 2s^3 + s^2 + 4s + 4.$$

P.T.O.

(b) Consider the liquid-level control system shown in Fig. Assume that the set point of the Controller is fixed. Assuming a step disturbance of magnitude Do, determine the error. Assume that Do is small and the variations in the variables **07**

from their respective steady-state values are also small. The controller is proportional. If the controller is not proportional, but integral, what is the steady-state error?

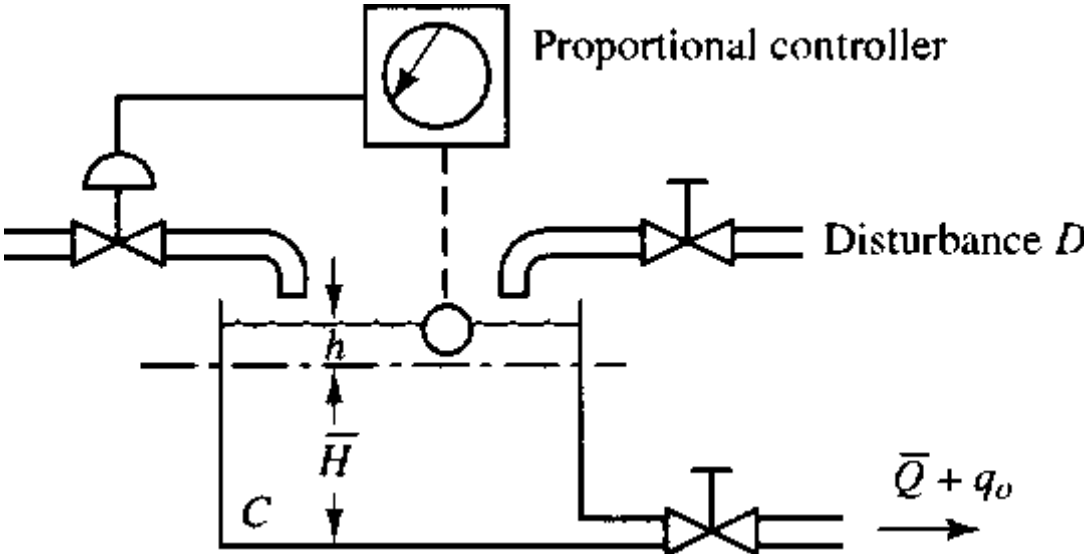

****