Seat No.: _____ Enrolment No._____

GUJARAT TECHNOLOGICAL UNIVERSITY

B. E. - SEMESTER – VI • EXAMINATION – WINTER 2012

Subject code: 162405 **Date: 07/01/2013**

Subject Name: Power Processing Circuit - I

Time: 02.30 pm - 05.00 pm **Total Marks: 70**

Instructions:

1. **Attempt any five questions.**
2. **Make suitable assumptions wherever necessary.**
3. **Figures to the right indicate full marks.**
4. **Notations /symbols used have usual meaning.**

Q.1	**(a)**	**Classify the rectifiers in detail.**	**04**
	(b)	**Justify the statement "Free wheeling diode improves the power factor of a system".**	**03**
	(c)	**Derive an expression for the (i) average load voltage (ii) RMS load voltage and (iii) average load current; for the single - phase controlled rectifier with inductive load.**	**07**
Q.2	**(a)**	**Describe the control strategies used for Chopper.**	**07**
	(b)	**Explain with neat power – diagram and associated waveforms the operation of three- phase uncontrolled rectifier with resistive load.**	**07**
		OR	
	(b)	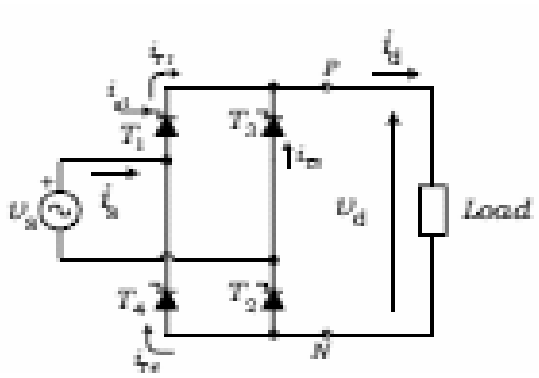 **For the above circuit assume inductive –resistive load and draw all associated waveforms. State the name of the above circuit.**	**07**
Q.3	**(a)**	**Enlist three terminals IC based linear regulators and explain any one in detail.**	**07**
	(b)	**Describe operating principle of SEPIC converter.**	**07**
		OR	
Q.3	**(a)**	**Why power supply is needed? Explain voltage – mode control of power supply with schematic diagram and waveform.**	**07**
	(b)	**Analyze the performance of the boost converter with continuous load current .Also, draw the relevant waveforms.**	**07**
Q.4	**(a)**	**Describe the voltage commuted chopper with necessary voltage and current waveforms as a function of time.**	**08**

	(b)	**Discuss the working principle of Cuk converter.**	**06**
		OR	
Q.4	**(a)**	**Draw and explain the Jone's chopper circuit in detail. Enlist its application(s).**	**08**
Q.4	**(b)**	**Discuss the working principle of Full- bridge converter.**	**06**
Q.5	**(a)**	**Write a technical note on: ZCS.**	**06**
	(b)	**Explain modeling of an isolated dc-dc converter circuit.**	**08**
		OR	
Q.5	**(a)**	**Write a detailed note on: Resonant switch converter.**	**06**
	(b)	**Compare (I) Half controlled –Full controlled rectifier. (II) Fly back – Forward converter.**	**08**

****