Seat No.: _____ Enrolment No._____

# GUJARAT TECHNOLOGICAL UNIVERSITY

**B.E. - SEMESTER – VIII EXAMINATION – OCTOBER 2012**

**Subject code: 182001** **Date: 27/10/2012**

**Subject Name: Programmable Logic Controllers**

**Time: 02.30pm - 05.00pm** **Total Marks: 70**

## Instructions:

1. **Attempt any five questions.**
2. **Make suitable assumptions wherever necessary.**
3. **Figures to the right indicate full marks.**

| | | | |
|---|---|---|---|
| **Q.1** | **(a)** | Explain advantages and disadvantages of PLC based control systems over conventional relay based control systems. | **07** |
| | **(b)** | Draw and explain DC input card of PLC. | **07** |
| **Q.2** | **(a)** | Explain interfacing of different inputs and outputs/actuators with PLC with suitable examples and diagrams. | **07** |
| | **(b)** | Write a short note on scan time of PLC and also explain importance of scan time. | **07** |
| | | **OR** | |
| | **(b)** | Draw and explain block diagram of PLC. | **07** |
| **Q.3** | **(a)** | Explain different conventions adopted in ladder diagrams. | **07** |
| | **(b)** | Design FBD program for the ladder diagram given in figure 1. | **07** |
| | | **OR** | |
| **Q.3** | **(a)** | Explain FBD programming of PLC in detail. | **07** |
| | **(b)** | Give Instruction List (IL) program for the ladder diagram given in figure 1. | **07** |

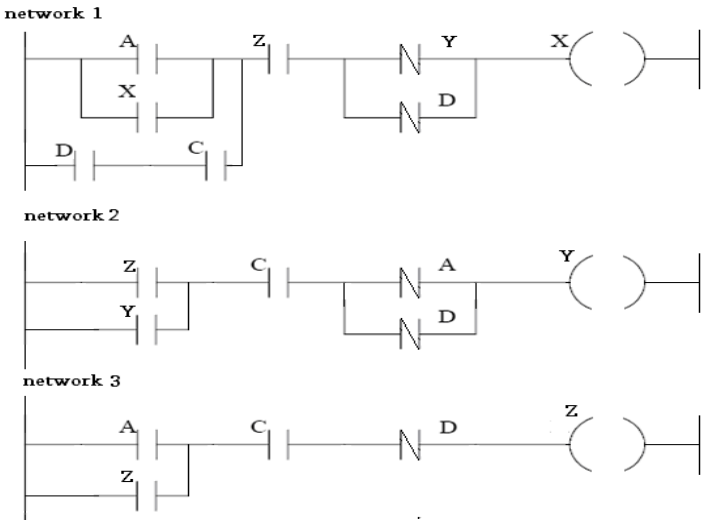


Figure 1

| | | | |
|---|---|---|---|
| **Q.4** | **(a)** | Explain different counter instructions in PLC with suitable examples. | **07** |
| | **(b)** | Explain Jump instructions in PLC with suitable examples. | **07** |
| | | **OR** | |
| **Q.4** | **(a)** | Explain different arithmetic instructions in PLC. | **07** |
| | **(b)** | Explain On Delay timer and OFF Delay timer instructions with timing diagrams. | **07** |

| | | | |
|---|---|---|---|
| **Q.5** | **(a)** | How the analog inputs and outputs are handled by PLC? Explain in detail. | **07** |
| | **(b)** | A handicap door opener has a button that will open two doors. When the button is pushed (momentarily) the first door will start to open immediately, the second door will start to open 2 seconds later. The first door power will stay open for a total of 10 seconds, and the second door power will stay on for 14 seconds. Design a PLC FBD to execute this sequence correctly. | **07** |

**OR**

| | | | |
|---|---|---|---|
| **Q.5** | **(a)** | Enlist different data comparison instructions in PLC and explain all of them in detail. | **07** |
| | **(b)** | Two feeder conveyors (F1 and F2) feed parts to a main conveyor (M). Both F1 and F2 are having 'NC' proximity sensor at the end. When 'NO' START pushbutton is pressed, F1 will be turned ON and after feeding 5 parts to M, F1 will be turned OFF. After waiting for 7 seconds, F2 will be turned ON and will remain in ON condition until it feeds 7 parts to M. When all 12 parts are arrived, M will be turned ON for 1 minute. If at any time 'NC' STOP pushbutton is pressed, all the outputs will be turned OFF. Design ladder diagram to execute this sequence correctly. | **07** |

**********