Seat No.: _____ Enrolment No._____

GUJARAT TECHNOLOGICAL UNIVERSITY

B.E. - SEMESTER – VIII EXAMINATION – OCTOBER 2012

Subject code: 182501 **Date: 27/10/2012**

Subject Name: Production and Operations Management

Time: 02.30pm - 05.00pm **Total Marks: 70**

Instructions:

1. **Attempt any five questions.**
2. **Make suitable assumptions wherever necessary.**
3. **Figures to the right indicate full marks.**

Q.1 (a) A manufacturer is developing plans for a facility to make aluminum storm windows. The desired minimum daily output capacity is 320 windows. Figure 1 & Table 1 shows the assembly line layout. Calculate total time required to produce one unit, maximum daily output, and minimum number of station to produce one unit & efficiency of line & also calculate employee idealness. **07**

Figure 1:

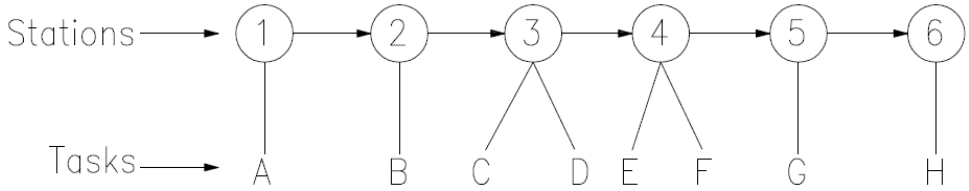

Table 1:

Work Station	Preceding Work Station	Task Assigned	Task's Required Predecessor	Task Time/Unit (in seconds)
1	-	A	NONE	70
2	1	B	A	80
3	2	C	A	40
		D	A	20
4	3	E	A	40
		F	B, C	30
5	4	G	C	50
6	5	H	D, E, F, G	50

(b) A firm believes that its annual profit depends on its expenditure for research. The information for the preceding 6 years is given below, estimate the profit when expenditure is 8 unit. **07**

Year	Expenditure for research	Annual Profit
2001	3	22
2002	4	27
2003	6	36
2004	5	32
2005	12	45

2006	7	36
2007	8	?

Q.2 **(a)** A Consulting company is under contract to carry out 7 projects, all with deadliness assured in days from now. The consultants are a small group they work together on each project, so the project will be started & completed sequentially. Under the term of contract, the consultant will receive Rs. 24000 for each project completed on time, but they will incur Rs. 40000 in penalties for each project completed late. Each project has an associate duration, which is the anticipated numbers of days required to carry out the project as shown in table. How should the projects be sequence in order to maximize net revenue? **07**

Project ID	1	2	3	4	5	6	7
Duration	2	4	6	8	10	12	14
Deadlines	6	12	30	19	12	18	24

(b) A factory producing only one item, which it sells for rupees 12.50 per unit has a fixed cost equal to rupees 60000 and variable cost rupees 7.50 per unit. Find out **07**

1) The number of unit to be produced to breakeven
2) Number of unit to be produced to earn profit of rupees 12000
3) The profit if 25000 unit are produced and sold

OR

(b) Explain the following in connection with breakeven chart with neat sketch **07**

1) Breakeven point
2) Margin of safety
3) Angle of incidence
4) Profit volume ration

Q.3 **(a)** Table contains information concerning five jobs that are awaiting processing at a work center **07**

Job	Processing Time (Days)	Due Date (Days)
A	2	7
B	8	16
C	4	4
D	10	17
E	5	15

A. Sequence the job using, 1) EDD. 2) SPT. 3) CR. Assume the list by order of arrival.
B. For each method in part A determine:
   1) Mean Flow Time.
   2) Average Lateness.
   3) The Average number of jobs at the work center.
C. Is one method superior to other? Explain.

(b) What is aggregate planning? Explain clearly the strategy to meet the uneven demand. **07**

OR

Q.3 **(a)** Explain time chart for scheduling & its usefulness. **07**

(b) A demand schedule of a product is shown in Table A. The Initial & Final inventory before & after the allocation are 20 & 25 units respectively as shown in Table B. The regular time, overtime & subcontracting capacities are also indicate in Table C. No shortages are to be planned. Prepare the transportation table & show the Optimum Solution. **07**

Table A :

Periods	Units
1	100
2	50
3	70
4	80
5	65

Table B :

Inventory	Cost
Initial 20	Regular time cost/unit = Rs. 100/-
	Overtime cost/unit = Rs. 125/-
Final 25	Subcontracting cost/unit = Rs. 130/-
	Carrying cost/unit = Rs. 2/-

Table C:

Periods	Regular Time	Overtime	Subcontract
1	60	18	1000
2	50	15	1000
3	60	18	1000
4	65	20	1000
5	50	12	1000

Q.4 (a) Name & Explain the factor which affect "make or buy policy" for a new product **07**

(b) A shopkeeper estimates the annual requirement of an item as 2000 units. He buys it from his supplier at a cost of Rs. 10/item and the cost of ordering is Rs. 50 each time he orders. If the stock holding costs are 25% per year of stock value, how frequently should he replenish his stocks? Further, suppose the supplier offers a 10% discount on orders between 400 & 699 items, & the 20% discount on orders exceeding or equal to 700. Can the shopkeeper reduce his cost by taking advantage of either of these discounts? **07**

OR

Q.4 (a) Outline the purpose of MRP & Explain the role of master production schedule relates to other elements of MRP system **07**

Q.4 (b) Prepare operation sheet for the component as shown in figure. **07**

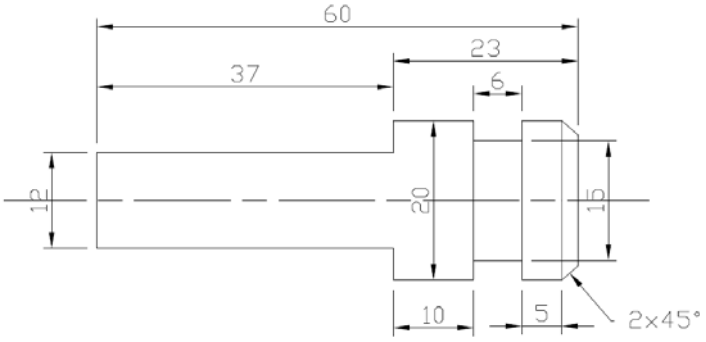

Q.5 (a) Using 3 months & 5 Months moving average method forecast for 12th period & calculate **07**

(i) Mean absolute error. (ii) Mean forecast error

Time	Observed Value
1	210
2	150
3	185
4	195
5	310
6	190
7	160
8	150
9	240
10	265
11	235

(b) Discuss geometric control theory for workspace control **07**

OR

Q.5 (a) What is the difference between a tolerance stack & limit stack? With the illustrations, differentiate between design tolerance stack & process tolerance stack. **07**

(b) The annual demand for a component is 24000 units the caring cost is Rs. 0.40/unit/year. The ordering cost is Rs.20/order & the shortage cost is Rs. 10/unit/year. Find the optimum values of following **07**

1. Economic order quantity
2. Maximum Inventory
3. Maximum shortage quantity
4. Cycle Time
5. Inventory Period
6. Shortage Period

****