Seat No.: _____ Enrolment No._____

GUJARAT TECHNOLOGICAL UNIVERSITY

BE - SEMESTER–VI • EXAMINATION – WINTER 2013

Subject Code: 163401 **Date: 27-11-2013**

Subject Name: Finite Element Analysis

Time: 02:30 pm to 05:00 pm **Total Marks: 70**

Instructions:

1. **Attempt all questions.**
2. **Make suitable assumptions wherever necessary.**
3. **Figures to the right indicate full marks.**

Q.1 **(a)** What are the applications and characteristics of finite element method? What are the different method for solving field problems in FEA? **07**

(b) What is Cholesky decomposition method? Solve following simultaneous equation by successive Gaussian Elimination Method. **07**

$$x_1-2x_2+6x_3=0;$$
$$2x_1+x_2+3x_3=3;$$
$$-x_1+3x_2 \quad =2$$

Q.2 **(a)** What do you mean by discretization? Derive an expression for assembly of element characteristics matrices. **07**

(b) How will you generate formulation of symmetric material matrix with the help of stress-strain relations? **07**

OR

(b) Write the expression for potential energy π. **07**

Q.3 **(a)** Consider the thin (steel) plate in figure. The plate has a uniform thickness t=1, young's modulus E = $30x10^6$psi and weight density ρ = 0.2836N/m3. In addition to its self- weight, the plate is subjected to a point load P=100N at its midpoint. **07**

a) Model the plate with two finite element.
b) Write down expressions for the element stiffness matrices & element body force vector F.
c) Assemble the structural stiffness matrix k & global load vector F.
d) Evaluate the stresses in each element.

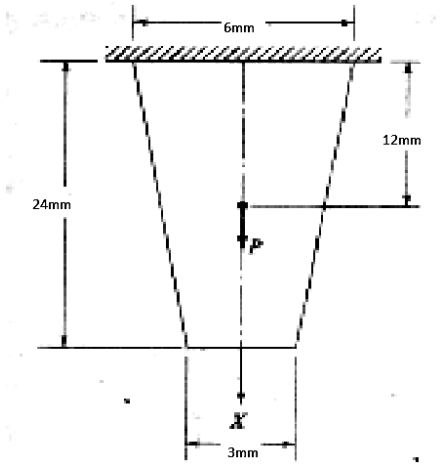

(b) Obtain a shape function and stiffness matrix for four nodded quadrilateral element. **07**

OR

Q.3 **(a)** Consider the bar shown in fig. an axial load p= 200x 10^3N is applied as shown. Using the penalty approach for handling boundary conditions do the following: **07**

a) Determine the nodal displacements.
b) Determine the stress in each material
c) Determine the reaction forces.

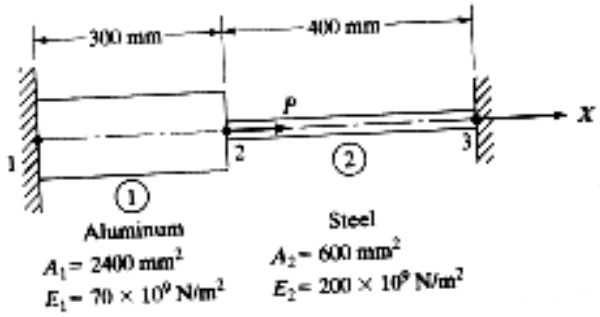

(b) Drive an expression for stiffness matrix and stress calculation in simple truss element. **07**

Q.4 **(a)** Drive an expression for Langrage's approach. **07**

(b) Consider an uniform cross section bar of length L made up of a material whose Young's modulus & density are given by E & ρ. Estimate the natural frequencies of axial vibration of the bar using both consistent & lumped mass matrices. **07**

OR

Q.4 **(a)** The undamped 2 d.o.f. system shown in figure, find the response of the system when the first mass alone is given an initial displacement of unity & released from rest. **07**

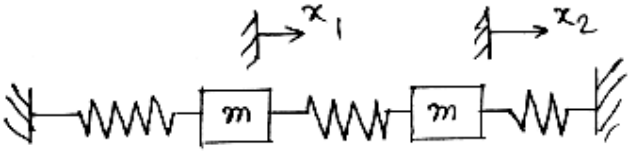

(b) What re the various solutions of Eigen value problems? Explain in details. **07**

Q.5 **(a)** Determine the diameters after deformation & the distribution of principle stresses along the radius of the infinite cylinder subjected to internal pressure as shown in figure. **07**

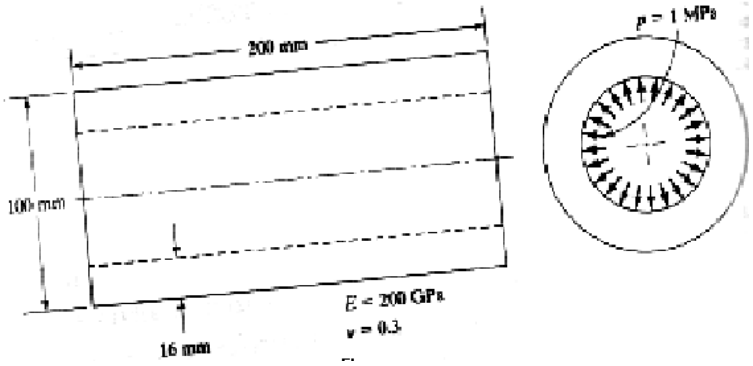

(b) Explain applications of FEM in metal cutting process. **07**

OR

Q.5 **(a)** Derive & expression for axisymmetric problems. **07**

(b) Explain application of FEM in solidification of castings and weldments. **07**

****