Seat No.: _____ Enrolment No._____

GUJARAT TECHNOLOGICAL UNIVERSITY

BE - SEMESTER–V • EXAMINATION – WINTER • 2014

Subject Code: 150304 **Date: 08-12-2014**

Subject Name: Modeling and Simulation of Biological Systems

Time: 10:30 pm to 01:00 pm **Total Marks: 70**

Instructions:

1. **Attempt all questions.**
2. **Make suitable assumptions wherever necessary.**
3. **Figures to the right indicate full marks.**

Q.1	**(a)**	Explain the purpose of modeling of a physiological system with applications in real world.	**07**
	(b)	Give a difference between linear and non-linear model with appropriate example of physiological systems.	**07**
Q.2	**(a)**	Discuss the effects on pressure at airway opening and air volume flow rate with increase in respiration rate.	**07**
	(b)	Explain the muscle stretch reflex action and draw the physiological model of muscle stretch reflex system.	**07**
		OR	
	(b)	Explain the procedure to determine the steady-state operating point of any physiological system.	**07**
Q.3	**(a)**	Enlist the methods of system analysis and explain the process of identification of a close-loop system.	**07**
	(b)	What is agonist & antagonist neurological control signals?	**07**
		OR	
Q.3	**(a)**	Describe the stability in terms of physiological systems with necessary examples.	**07**
	(b)	Draw & explain westheimer's saccadic eye movement model with it's limitations.	**07**
Q.4	**(a)**	Draw and explain the computational flow diagram of cardiac system.	**07**
	(b)	Draw the frequency responses of the systems shown in Figure, when: (a) The feedback loop is open (b) The feedback loop is closed. *(Assume the time delay T=1sec)*	**07**

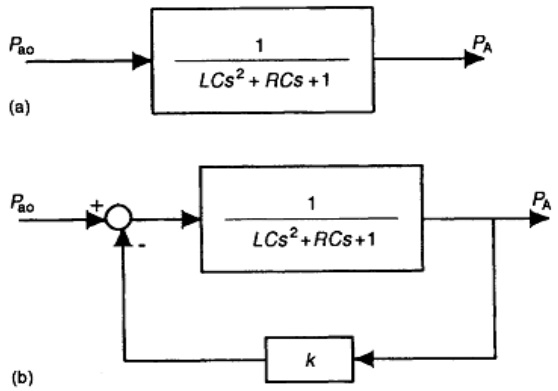

OR

Q.4 **(a)** Describe the viscoelasticity of lung muscles. Draw a model of lung tissue viscoelastance. **07**

(b) Determine the frequency response of linearized lung mechanics model as shown in figure. **07**

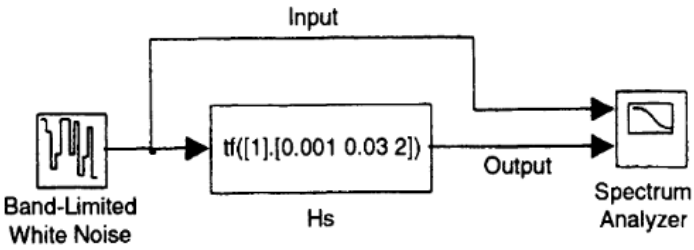

Q.5 **(a)** Draw and explain frequency responses of the circulatory control model of normal heart rate control with effects of vasodilator and vasoconstrictor. **07**

(b) Draw steady-state analysis of glucose regulation in normal conditions & diabetic patient. Also derive a mathematical function to estimate the steady-state glucose and insulin levels in a patient with an abnormally high gain in the insulin response to glucose. (Assume β to be twice as large as its normal value.) **07**

OR

Q.5 **(a)** Draw and explain the frequency responses of glucose-insulin regulation model in conditions simulating a typical normal human and a Type-2 diabetic. **07**

(b) Develop the mechanical equivalent of the electrical analog of respiratory mechanics shown in figure. **07**

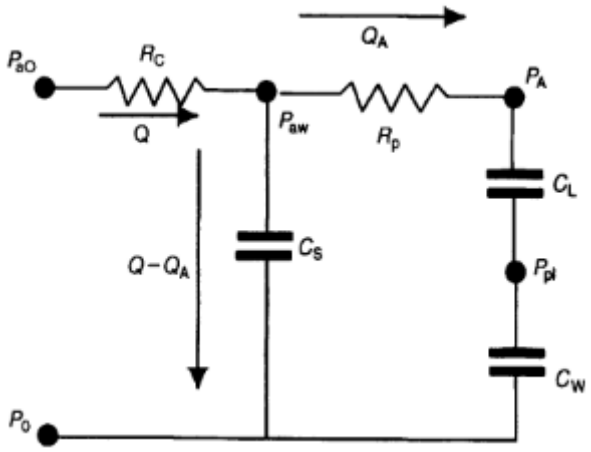

****