Seat No.: _____ Enrolment No._____

GUJARAT TECHNOLOGICAL UNIVERSITY

BE - SEMESTER–VII • EXAMINATION – WINTER • 2014

Subject Code: 172007 **Date: 29-11-2014**

Subject Name: Modern Control System

Time: 10:30 am - 01:00 pm **Total Marks: 70**

Instructions:

1. **Attempt all questions.**
2. **Make suitable assumptions wherever necessary.**
3. **Figures to the right indicate full marks.**

Q.1 (a) Consider the unity feedback system with **07**

$$G(s) = \frac{k}{s(s+20)(s+40)}$$

The system is operating at 20% overshoot.

Design a suitable compensator to decrease the Settling time by a factor of 2 without affecting the percentage overshoot.

(b) Design a PI controller to drive the step response error to zero for the unity feedback system with **07**

$$G(s) = \frac{k}{(s+3)(s+1)(s+10)}$$

The system is operating with a damping ratio of 0.5.

Q.2 (a) For the unity feedback system with **07**

$$G(s) = \frac{k}{s(s+5)(s+11)}$$

Design a lag-lead compensator to decrease the peak time by a factor of 2, decrease the percent overshoot by a factor of 2 and improve the steady state error by a factor of 30.

(b) Consider the unity feedback system with **07**

$$G(s) = \frac{k}{s(s+5)(s+20)}$$

The uncompensated system has about 55% overshoot and peak time of 0.5 second when Kv=10.

Use frequency response method to design a lead compensator to reduce the percentage overshoot to 10% while keeping the s. s. error and peak time same.

OR

(b) Design a lag- compensator for the given system **07**

$$G(s) = \frac{k(s+4)}{(s+2)(s+6)(s+8)}$$

Operating with a 45° and a static error constant of 100.

Q.3 (a) Use frequency response method to design a lag-lead compensator for a unity feedback system where **07**

$$G(s) = \frac{k(s+7)}{s(s+5)(s+15)}$$

Do the following: percent overshoot =15%, settling time=0.1 second and kv=1000.

(b) Consider the electrical network shown in fig. I .Obtain the state space model. **07**

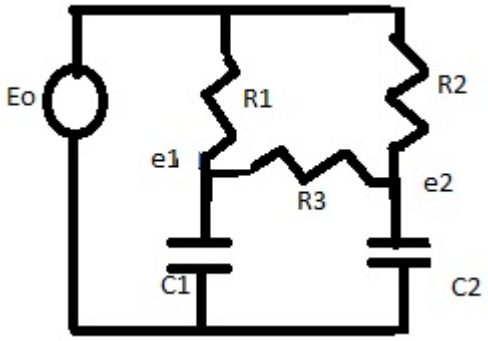

OR

Q.3 **(a)** Use the parallel decomposition and Obtain the state space equation for the transfer function given below. **07**

$$G(s) = \frac{s^2 + 6s + 8}{(s+3)(s^2 + 2s + 2)}$$

(b) Apply cascade decomposition method to obtain state space representation of the transfer function given below: **07**

$$\text{G(s)}= G(s) = \frac{s^2 + 6s + 8}{(s+3)(s^2 + 2s + 5)} \;, G(s) = \frac{(s+3)}{(s+1)(s+2)}$$

Q.4 **(a)** Obtain the time response of the system given below **07**

$$\begin{bmatrix} \dot{x}1 \\ \dot{x}2 \end{bmatrix} = \begin{bmatrix} 0 & 1 \\ -4 & -5 \end{bmatrix} x + \begin{bmatrix} 0 \\ 1 \end{bmatrix} u$$, given x(0)=[1 1]^T and u is unit step input.

(b) Consider a double-integrator plant described by the differential equation **07**

$$\frac{d^2\theta}{dt^2} = u(t)$$

Develop a state equation and select θ and $\dot{\theta}$ as the state variable also check for the controllability.

OR

Q.4 **(a)** Find the z-transform of the following: **07**

1.f(t)=sin wt 2.f(t)= $e^{-at}\cos wt$

(b) Discuss the stability analysis of sampled data control system with the principle of mapping. **07**

Q.5 **(a)** Find the inverse z-transform of the following term: **07**

$$\text{F(z)}= \frac{0.632z}{z^2 - 1.368z + 0.368}$$

(b) Determine the stability of a sampled data control system having following chara.polynomial **07**

$$2z^4 + 8z^3 + 12z^2 + 5z + 1 = 0$$

OR

Q.5 **(a)** Discuss the pole placement technique using the state feedback controller. **07**

(b) A regulator system has the plant **07**

$$\begin{bmatrix} \dot{x}1 \\ \dot{x}2 \end{bmatrix} = \begin{bmatrix} 0 & 1 \\ 20.6 & 0 \end{bmatrix} x + \begin{bmatrix} 0 \\ 1 \end{bmatrix} u ,$$

Design a control law u=-k*x so that closed loop system has eigenvalues at -1.8±j2.4.