Seat No.: _____ Enrolment No._____

GUJARAT TECHNOLOGICAL UNIVERSITY

DIPLOMA ENGINEERING – SEMESTER – III • EXAMINATION – SUMMER- 2017

Subject Code: 3335501 **Date: 27-04 -2017**

Subject Name: Fabrication Drafting

Time: 02:30 PM TO 05:00 PM **Total Marks: 70**

Instructions:

1. **Attempt all questions.**
2. **Make Suitable assumptions wherever necessary.**
3. **Figures to the right indicate full marks.**
4. **Use of programmable & Communication aids are strictly prohibited.**
5. **Use of only simple calculator is permitted in Mathematics.**
6. **English version is authentic.**

Q.1 (a) Draw a typical fabrication drawing and write sequence of drawing reading. **07**

(b) Draw neat sketch of following process equipment set-up & fit-up. **07**

1. Shell to shell long seam setup
2. Shell to shell circular seam setup
3. Shell to dish end setup
4. Shell to cone setup
5. Nozzle setup

Q.2 (a) Draw following riveted joint. **07**

1. Double riveted lap joint (Zig-zag riveting)
2. Triple riveted lap joint (chain riveting)

(b) Draw piping line diagram and label different piping elements in it. Write application of different piping elements. **07**

OR

(b) Draw a typical process flow diagram (PFD) and label different elements in it. **07**

Q.3 Draw following views of an object as shown in Fig.1. **14**
(1) Front view (2) Full sectional L.H. side view (3) Top plan.

OR

Q.3 Elevation and end view of a bracket are given in Figure 2. Draw front elevation, left hand sectional side view; take section at B-B and top plan in the same system of projection. **14**

Q.4 Draw the isometric view of an object from the given F.V. and T.V. shown in Fig. 3 **14**

OR

Q.4 Draw detail drawing of Knuckle joint shown in Fig.4 **14**

Q.5 F.V. of 'T' Pipe joint is given in Fig.5. Draw the development of both the pieces. **14**

OR

Q.5 Two equal size pipes, diameter 65 mm, main pipe vertical and branch pipe inclined at 30^0 to horizontal are connected with their axes intersecting. Draw projections of connected pipes, when plane containing two axes is parallel to V.P. Discuss the nature of the curve. **14**

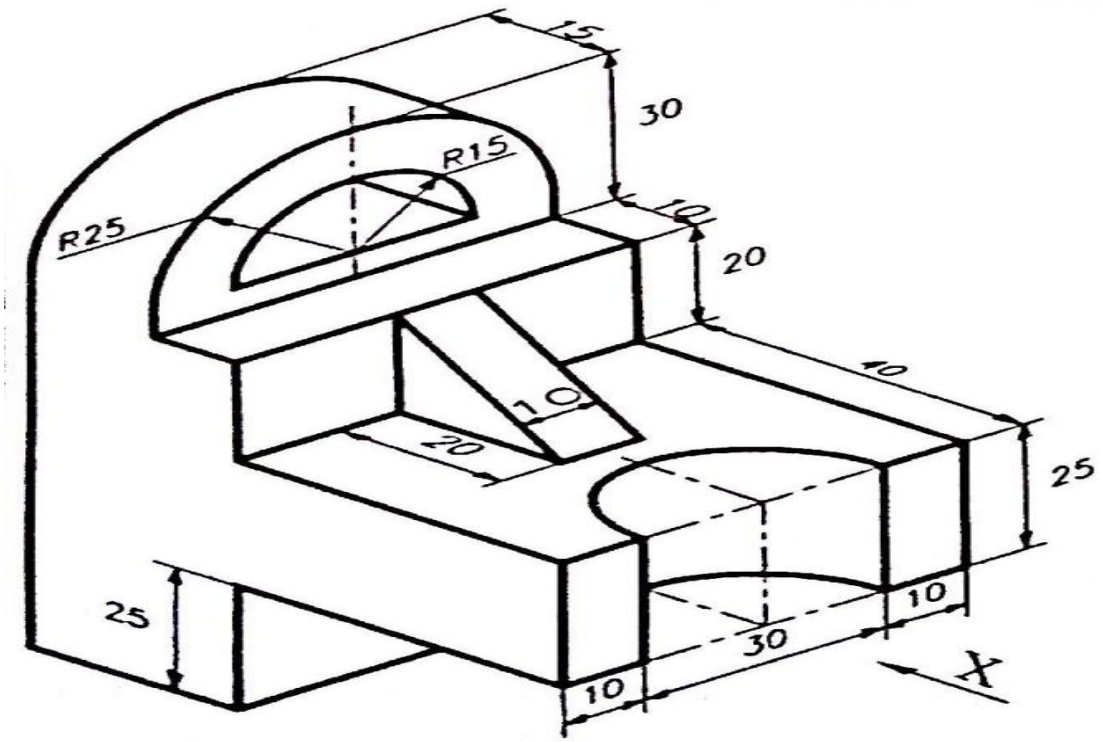

Fig.- 1 All Dimensions are in mm

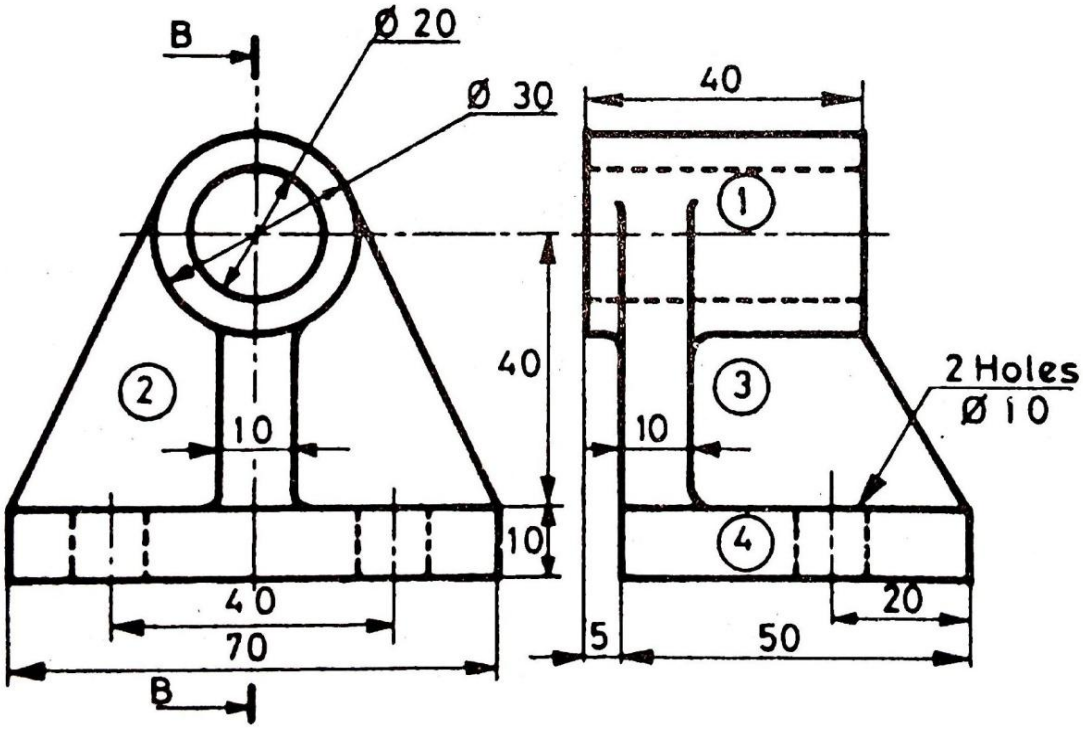

Fig.- 2 All Dimensions are in mm

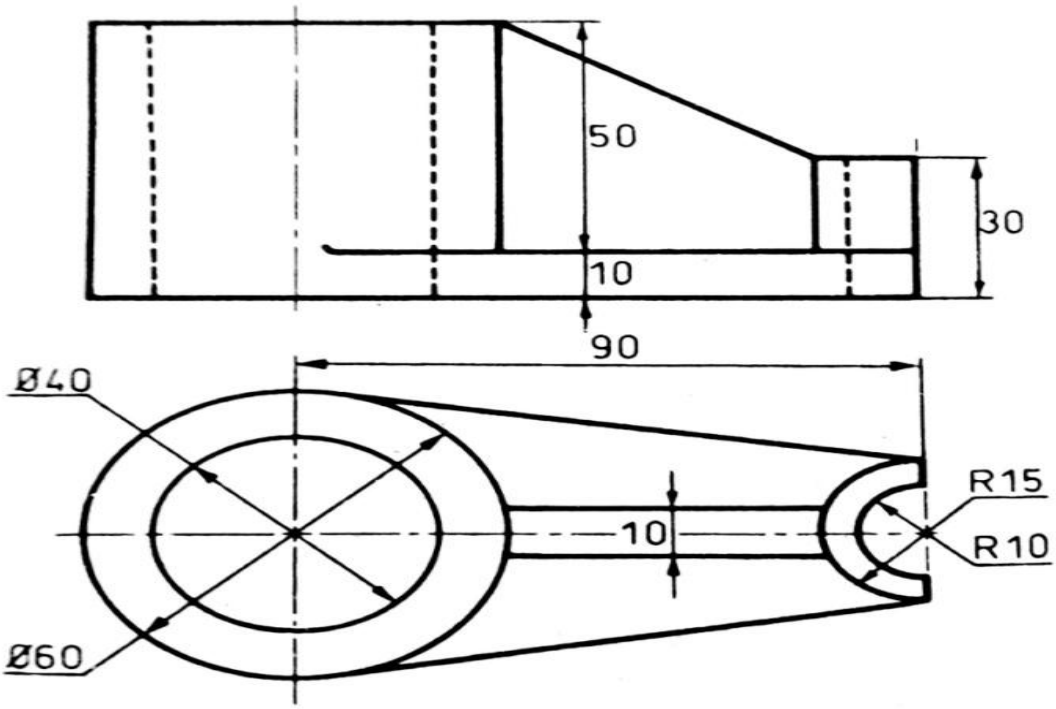

Fig.- 3 All Dimensions are in mm

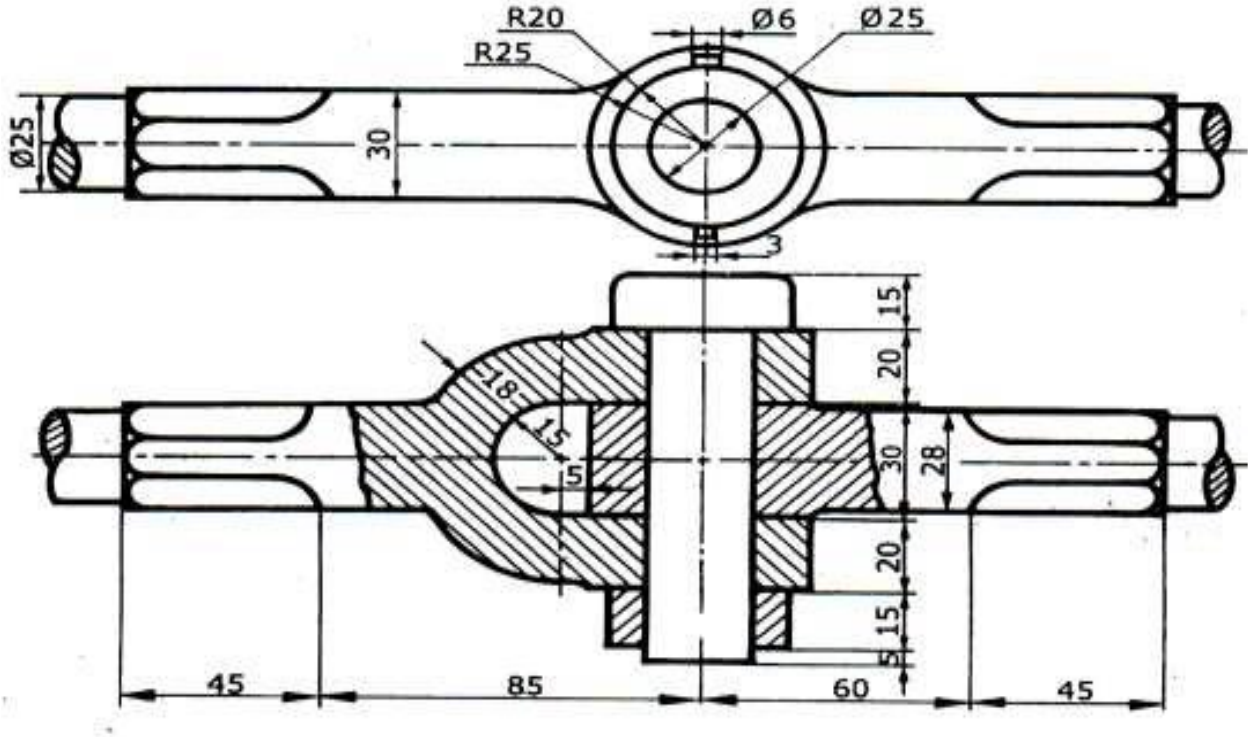

Fig.- 4 All Dimensions are in mm

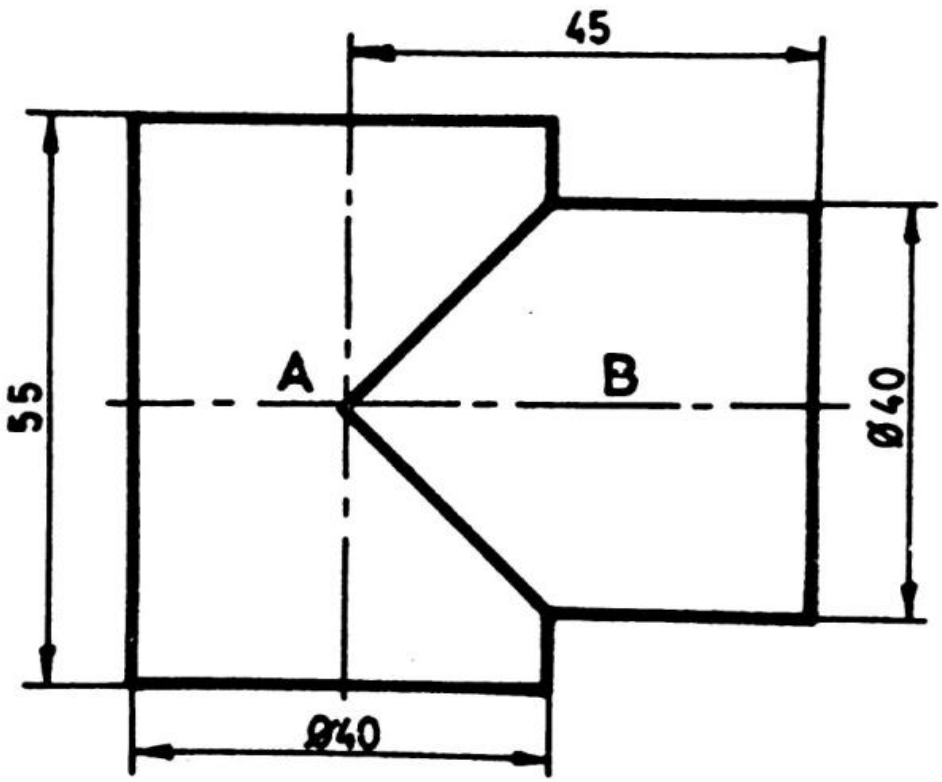

Fig.- 5 All Dimensions are in mm

****