Seat No.: _____ Enrolment No._____

GUJARAT TECHNOLOGICAL UNIVERSITY

Diploma Engineering - SEMESTER–IV • EXAMINATION – SUMMER 2013

Subject Code: 345502 **Date: 05-06-2013**

Subject Name: Sheet Metal Fabrication

Time: 10:30 am - 01:00 pm **Total Marks: 70**

Instructions:

1. **Attempt all questions.**
2. **Make suitable assumptions wherever necessary.**
3. **Figures to the right indicate full marks.**
4. **English version is considered to be Authentic.**

Q.1	(a)	Make sheet metal pattern development of Hopper shown in fig. - 1	**07**
	(b)	Explain spring back effect in sheet metal work and method to reduce it.	**07**
Q.2			
	(a)	Explain mechanism of shearing action in press tool.	**07**
	(b)	Explain characteristics of sheet metal with regard to various forming operation.	**07**
		OR	
	(b)	Explain different of sheet metal joints and give its application.	**07**
Q.3			
	(a)	Explain soldering process with neat sketch, write advantages, limitation & application of it.	**07**
	(b)	Define “gas welding process” Explain its principle of operation with neat sketch.	**07**
		OR	
Q.3	(a)	Explain different safety precautions to be taken in gas welding shop.	**07**
	(b)	Explain types and application of different gas welding flames	**07**
Q.4			
	(a)	Explain gas welding techniques with neat sketch.	**07**
	(b)	Explain function of regulator and back fire arrestors in gas welding.	**07**
		OR	
Q. 4	(a)	Define “resistance welding process”. Explain different variables of resistance welding process.	**07**
	(b)	Describe spot welding equipment with neat sketch giving functions of each part.	**07**
Q.5			
	(a)	Explain quality control in resistance welding.	**07**
	(b)	Explain advantages & limitation of welded joint over riveted joints.	**07**
		OR	
Q.5	(a)	Draw neat sketch of different riveted joints, 1. Single strip butt joint (Single riveted & double riveted.) 2. Double strip butt joint (Single riveted & double riveted.) 3. Lap joint	**07**
	(b)	List different sheet metal work application and explain any one with neat sketch.	**07**

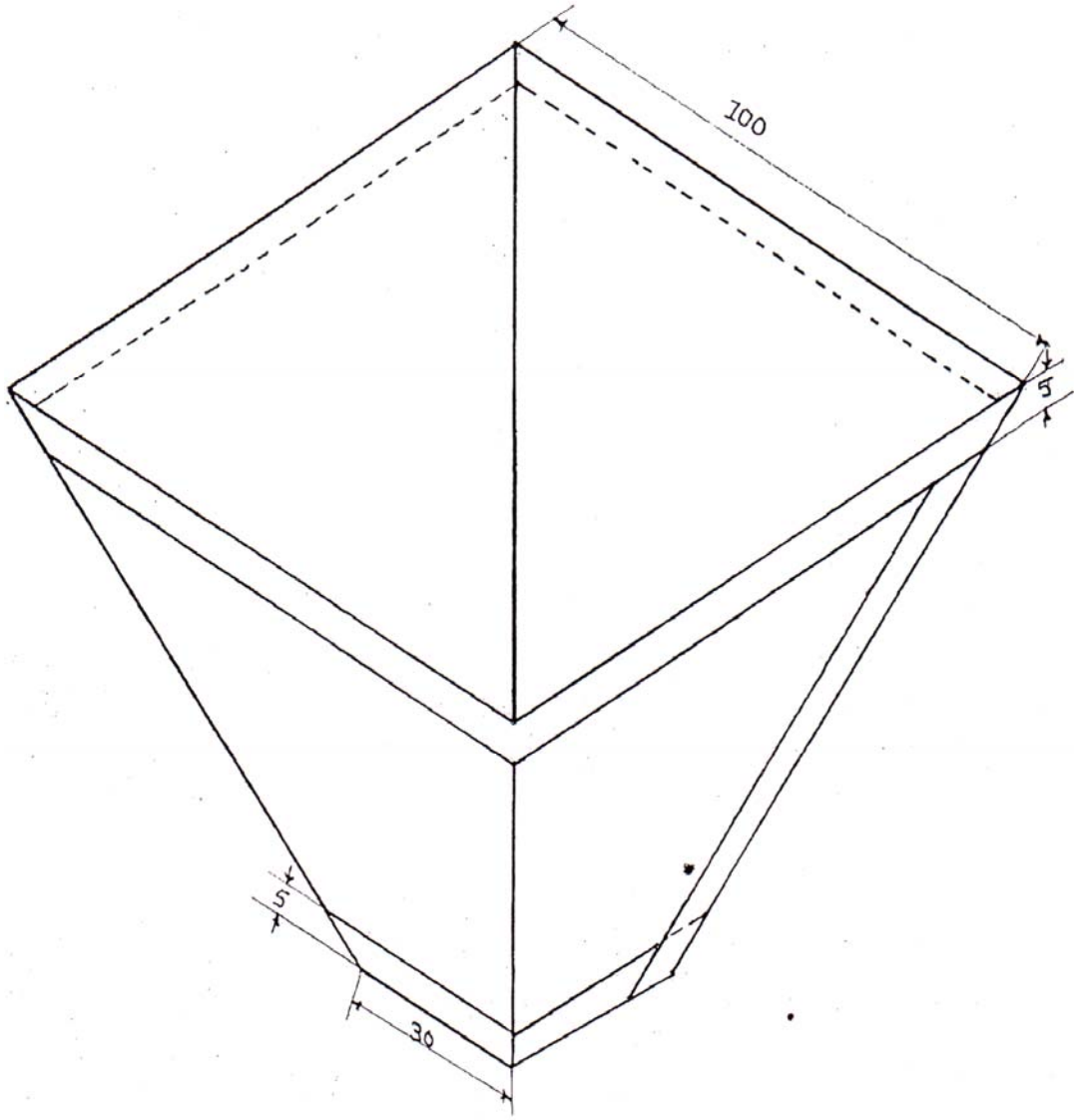

QUE 1 – A FIG. – 1

NOTE :- (1) All dimensions are in mm
(2) Height of hopper is 50 mm

****