Seat No.: _____ Enrolment No._____

GUJARAT TECHNOLOGICAL UNIVERSITY

Diploma Engineering - SEMESTER–I&II • EXAMINATION – SUMMER • 2014

Subject Code: 320015 **Date: 30-06-2014**

Subject Name: Mechanical Structure and Piping Drafting

Time: 10:30 am - 01:30 pm **Total Marks: 70**

Instructions:

1. **Attempt all five questions.**
2. **Make suitable assumptions wherever necessary.**
3. **Figures to the right indicate full marks.**
4. **Each question carry equal marks (14 marks)**

Q.1 (a) Draw a typical fabrication drawing and write sequence of drawing reading. **07**

(b) Explain following terms w.r.t. dimensional tolerance with neat sketch **07**

1. Basic dimension
2. Upper deviation
3. Lower deviation
4. Tolerance zone
5. Actual size
6. Zero line
7. Unilateral limits

Q.2 (a) Explain commercial form of metal as BIS in following tabulated format **07**

Sr. No	Description	symbol	Dimensions to be specified of the profile section		Designation Example
			letter	figure	

(b) Draw piping line diagram and label different piping elements in it. Write application of different piping elements **07**

OR

(b) Explain ANY SEVEN AutoCAD commands with neat sketch. **07**

Q.3 Draw following views of object shown in FIG-1 by using 1st angle projection system **14**

1. Front view 2. R.H.S.V. 3. Top plan

OR

Q.3 Draw by the same method of projection following views of object shown in FIG-2 **14**

1. Front view
2. Sectional side view take section along X-X
3. Top plan

Q.4 Draw Isometric view of given orthographic views shown in FIG-3 **14**

OR

Q.4 Make detail drawing of cotter joint shown in FIG-4 **14**

Q.5 Draw development of part B of object shown in FIG-5 **14**

OR

Q.5 (a) Draw neat sketch and label different parts of following process equipment **07**

1. Pressure vessel
2. Helical screw, cone type, propeller, radial propeller, high speed disc agitator

(b) Draw N or Z type nomograph of equation E=I*R **07**

Where I = 0 to 100 Amp

R = 0 to 150 Ohm

Find value of E when I=50 Amp. And R=100 Ohm

****

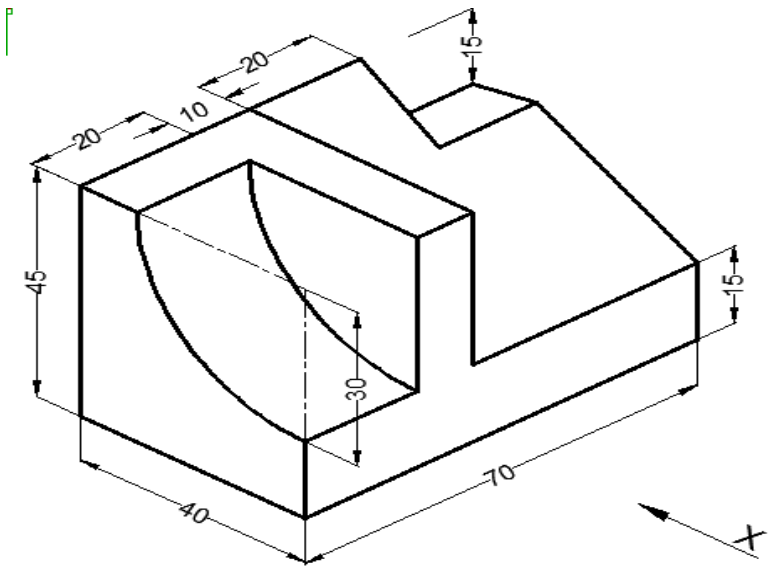

FIG-1 ALL DIMENSIONS ARE IN MM

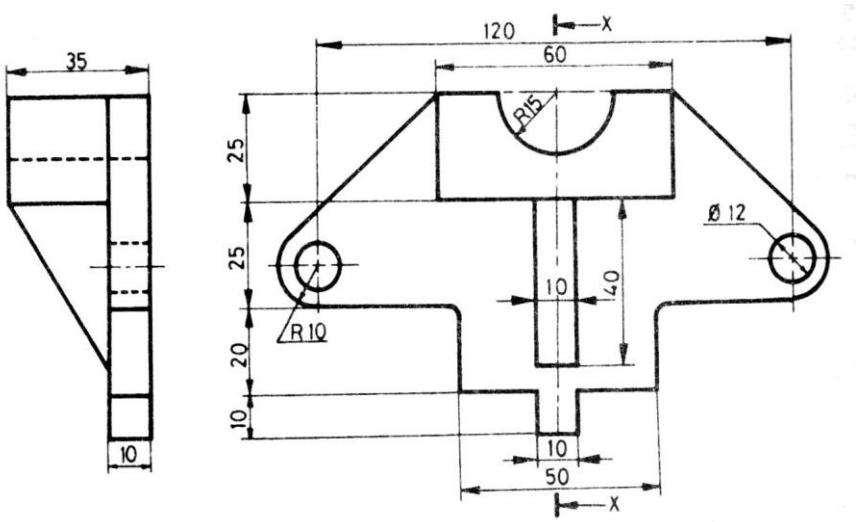

FIG-2 ALL DIMENSIONS ARE IN MM

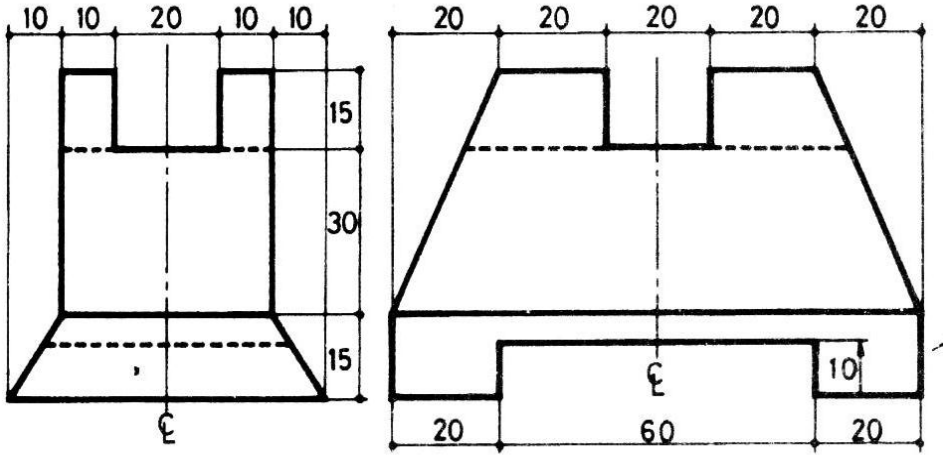

FIG-3 ALL DIMENSIONS ARE IN MM

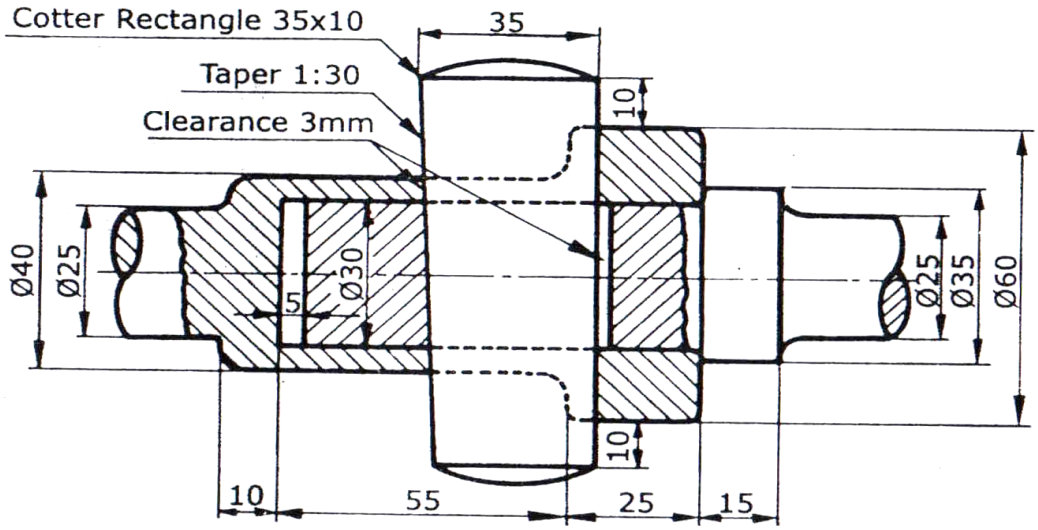

FIG-4 ALL DIMENSIONS ARE IN MM

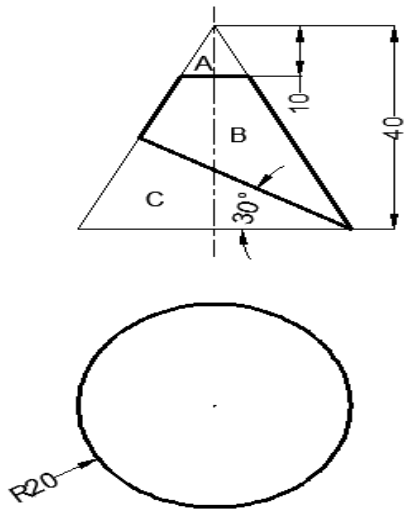

FIG-5 ALL DIMENSIONS ARE IN MM

****