Seat No.: _____ Enrolment No._____

GUJARAT TECHNOLOGICAL UNIVERSITY

Diploma Engineering - SEMESTER–III • EXAMINATION – SUMMER • 2015

Subject Code: 3335501 **Date: 30-04-2015**

Subject Name: Fabrication Drafting

Time: 02:30 pm - 05:00 pm **Total Marks: 70**

Instructions:

1. **Attempt all questions.**
2. **Make suitable assumptions wherever necessary.**
3. **Figures to the right indicate full marks.**
4. **English version is considered to be Authentic.**

Q.1 (a) Draw a typical fabrication drawing and write different general notes written on it **07**

(b) Draw neat sketch and label different parts of following process equipment **07**

1. Pressure vessel
2. Shell and tube heat exchanger

Q.2 (a) Explain ANY SEVEN commercial form of metal as BIS in following tabulated format **07**

Sr. No	Description	symbol	Dimensions to be specified of the profile section		Designation Example
			letter	figure	

(b) Draw a typical process & instrument diagram (P&ID) and label different elements in it **07**

OR

(b) Draw neat sketch of following process equipment setup & fit up **07**

1. Shell to shell long seam setup
2. Shell to shell circular seam setup
3. Shell to dished end setup

Q.3 Draw following views of object shown in FIG-1 **14**

1. Sectional elevation take section along A-B
2. R.H.S.V
3. Top plan

OR

Q.3 Draw by the other than the system of projection used of the views shown in FIG-2 **14**

1. Sectional elevation take section along A-A
2. Sectional top plan take section along B-B
3. R.H. side view

Q.4 F.V. and R.H.S.V. of a machined C.I. block are given FIG-3. Draw its isometric views. **14**

OR

Q.4 Make detail drawing of cotter joint shown in FIG-4 **14**

Q.5 Draw development of PART – A of object shown in FIG-5 **14**

OR

Q.5 A vertical cylinder, diameter of base 42 mm and height 65 mm, is resting on H.P. on its base. It is penetrated by a horizontal cylinder, diameter of base 35 mm and height 73 mm. Axes of two cylinders bisect each other at right angles. Draw their projections showing on them curves of intersection assuming the axis of penetrating cylinder parallel to V.P. **14**

****

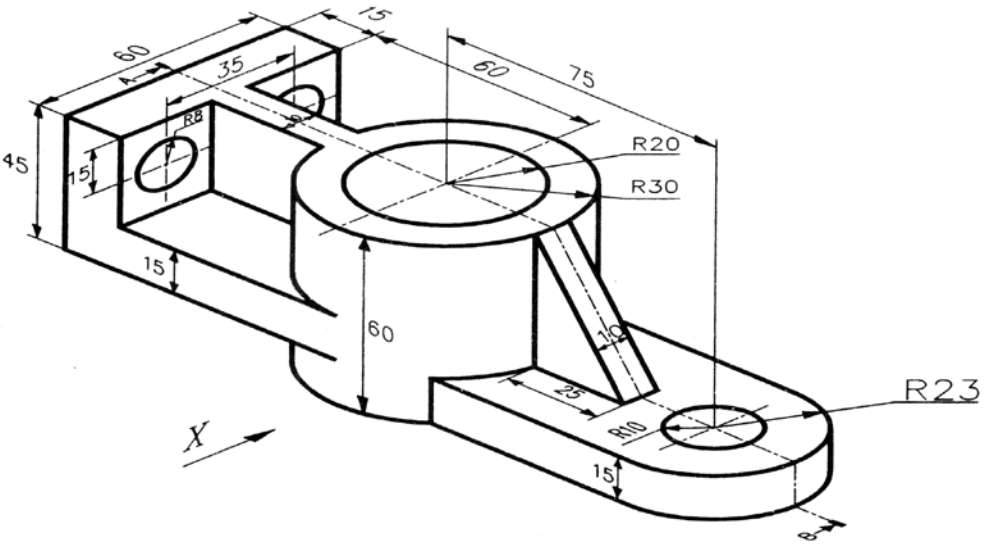

FIG-1 ALL DIMENSIONS ARE IN MM

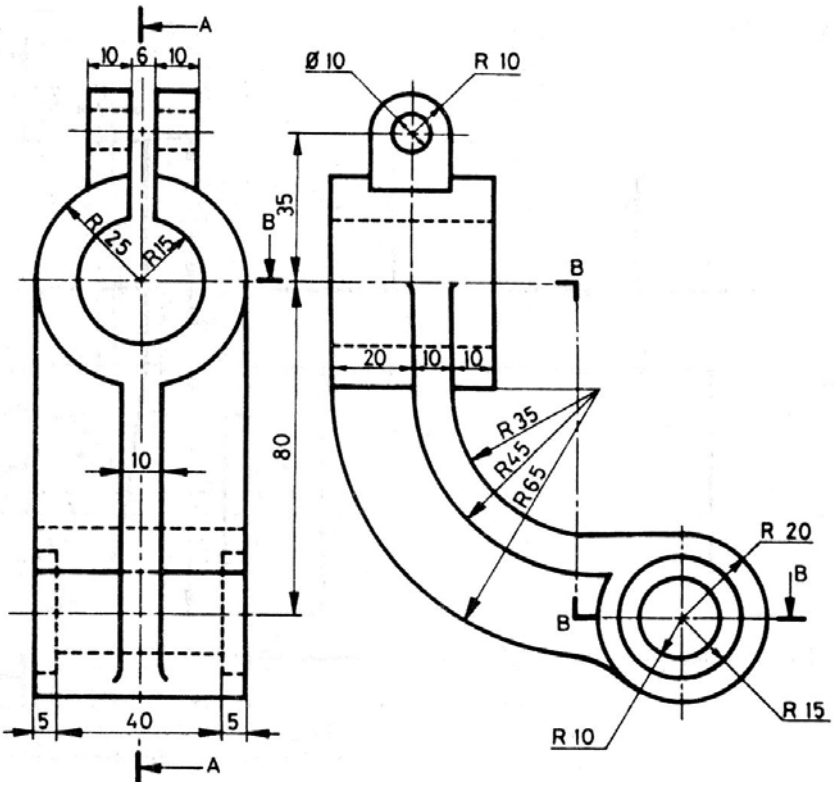

FIG-2 ALL DIMENSIONS ARE IN MM

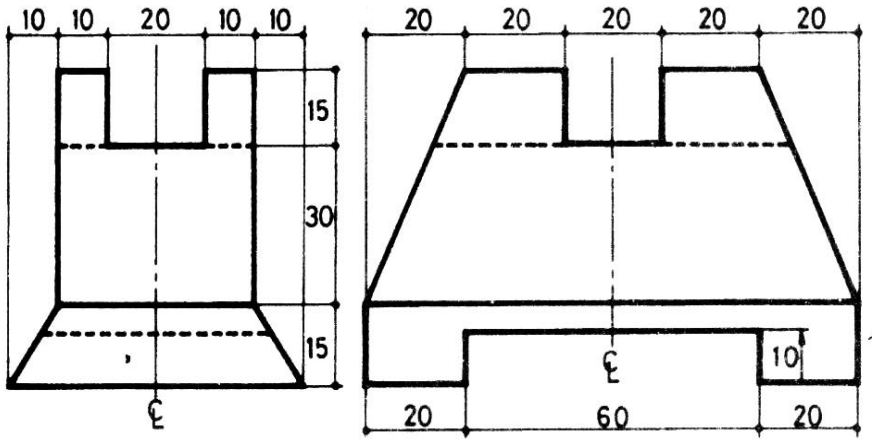

FIG-3 ALL DIMENSIONS ARE IN MM

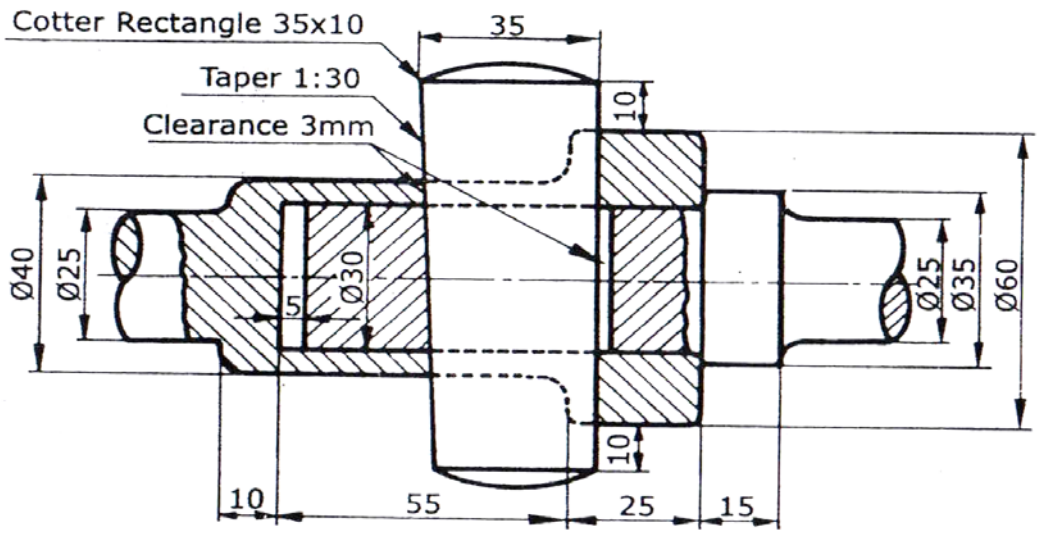

FIG-4 ALL DIMENSIONS ARE IN MM

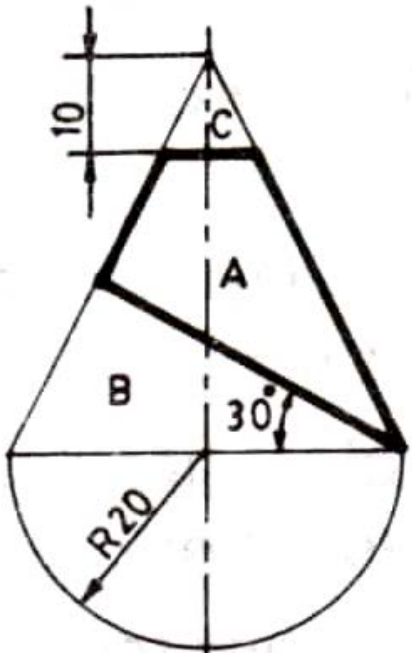

FIG-5 ALL DIMENSIONS ARE IN MM

****