Seat No.: _____ Enrolment No._____

GUJARAT TECHNOLOGICAL UNIVERSITY

Diploma Engineering - SEMESTER – V • EXAMINATION – WINTER 2012

Subject code: 355501 **Date: 30/12/2012**

Subject Name: Fabrication Design

Time: 10.30 am - 01.00 pm **Total Marks: 70**

Instructions:

1. **Attempt any five questions.**
2. **Make suitable assumptions wherever necessary.**
3. **Figures to the right indicate full marks.**
4. **English version is considered to be Authentic.**

Q.1	(a)	Define the term " Fabrication Design" and state the general design procedure with schematic diagram.	**07**
	(b)	Give the classification of engineering materials as per ASME Sec-II. And Describe the mechanical properties of materials.	**07**
Q.2			
	(a)	Define the term "Factor of Safety". Explain the selection criteria for 'Factor of safety'	**07**
	(b)	Explain with suitable examples the importance of codes and standards in fabrication design.	**07**
		OR	
	(b)	Calculate C.G. of the I - Section shown in **Fig. No. - 1**	**07**
Q.3			
	(a)	Explain design preliminary and design considerations made in design of Pressure Vessel as per ASME Sec-VIII .	**07**
	(b)	A mild steel Rod of 12 mm diameter was tested for tensile Strength with gauge length 60 mm. The following observations was recorded (i) Final Length = 80 mm. (ii) Final Diameter = 7 mm. (iii) Yield load = 3.4 K-N (iv) Ultimate load = 6.1 K-N From this observations calculate (i) Yield stress (ii) Ultimate Tensile stress (iii) Percentage reduction in area (iv) Percentage elongation.	**07**
		OR	
Q.3	(a)	Explain design .formula with neat sketches various types of "Heads" and "Closers" used in Pressure Vessels.	**07**
	(b)	Explain briefly the design considerations in various types of supports for pressure vessels.	**07**
Q.4			
	(a)	Explain basic design considerations in structural design like Transmission tower' and 'industrial shades.'	**07**
	(b)	As shown in FIG. NO. 2. a simply supported beam 6 m long is subjected to two point loads of 3 kN and 6 kN each at distances of2 m. and 4 m. from the left end. Draw S.F. and B. M. diagrams for the beam	**07**
		OR	

Q. 4	(a)	Explain with suitable examples design of "Butt welded joints" and " Single and Double fillet welded joints.	**07**
	(b)	Explain the following terms in connection with design of machine members subjected to varying loads. (i) Endurance limit (ii) Size factor (iii) Surface finish factor (iv) Notch sensitivity.	**07**
Q.5			
	(a)	As per ASME Sec.-VIII Div.-1 Calculate the thickness of cylindrical shell from the following data. (i) Internal pressure = P = 500 kN/ m2 (ii) Nominal diameter of shell = D = 1.2 m. (iii) Allowable design stress = σt = 118 MN / m2 (iv) Corrosion allowance = 2 mm. (v) Joint efficiency = J = 0.85 Assume additional data if necessary.	**07**
	(b)	Explain with respect to structural design, simple design, semi rigid design and Fully rigid design.	**07**
		OR	
Q.5	(a)	Describe the classification of Pressure Vessels as per Codes and Standard. And draw neat sketches of a Pressure vessel showing its parts.	**07**
	(b)	A structural steel plate 75 mm wide and 15 mm thick loaded statically in tension by a load of 55 kN is welded to a plate with normal ' Transverse Lap Joint' welds as shown in FIG.NO.3 Determine the size of the weld length required to withstand the load.	**07**

****

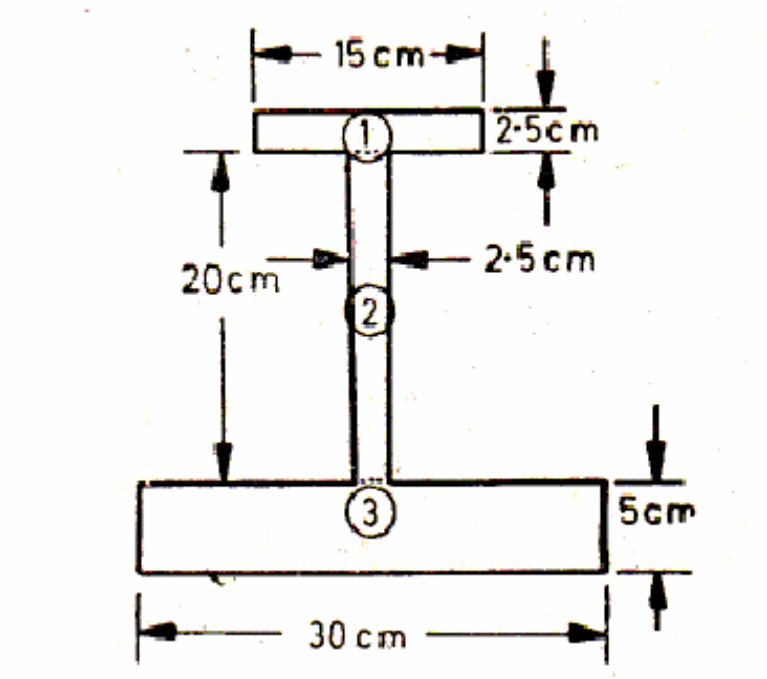

FIG.NO 1
QUE. NO. 2 (b).

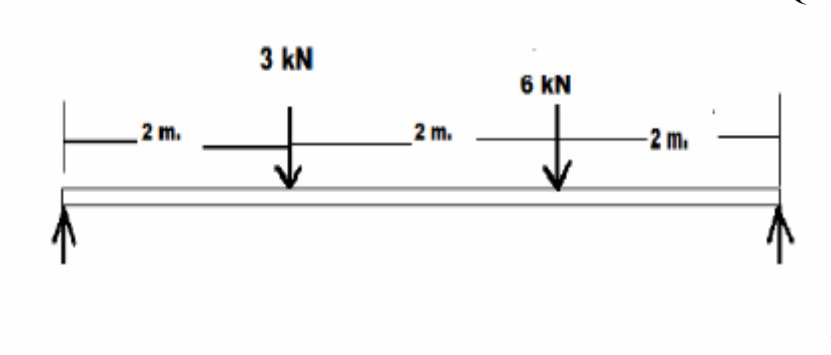

FIG. NO.2
QUE. NO. 4 (b)

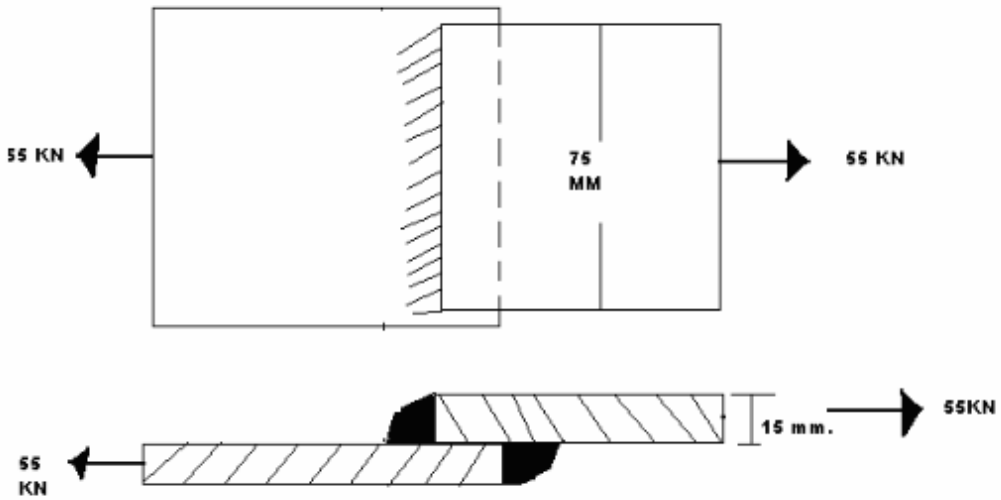

FIG. NO.3
QUE. NO. 5 (b)