Seat No.: _____ Enrolment No._____

GUJARAT TECHNOLOGICAL UNIVERSITY

Diploma Engineering - SEMESTER–III • EXAMINATION – WINTER 2013

Subject Code: 3335501 **Date: 26-11-2013**

Subject Name: Fabrication Drafting

Time: 02:30 pm - 05:00 pm **Total Marks: 70**

Instructions:

1. **Attempt all questions.**
2. **Make suitable assumptions wherever necessary.**
3. **Figures to the right indicate full marks.**
4. **English version is considered to be Authentic.**

Q.1 (a) Draw a typical fabrication drawing and write different general notes written on it **07**

(b) Draw neat sketch and label different parts of following process equipment **07**

1. Pressure vessel
2. Shell and tube heat exchanger

Q.2 (a) Explain ANY SEVEN commercial form of metal as BIS in following tabulated format **07**

Sr. No	Description	symbol	Dimensions to be specified of the profile section		Designation Example
			letter	figure	

(b) Draw following piping symbols **07**

1. Elbow 90º
2. Eccentric reducer
3. Tee
4. Cross
5. Angle gate valve
6. Stop coke
7. Expansion joint
8. Union
9. Elbow turn down
10. Positive displacement pump
11. Cone roof tank
12. Reciprocating compressor
13. Agitator or mixer
14. Condenser

OR

(b) What is fit? Explain different types of fit with neat sketch **07**

Q.3 Draw (1) Front View (2) Full sectional L.H.S.V. (3) Top Plan of object shown in Fig. – 1 using 1 st Angle system. **14**

OR

Q.3 Draw by same method of projection, following views of object shown in Fig.-2 **14**

(1) Front View
(2) Sectional side view, take section along X-X
(3) Top plan

Q.4 Draw detail drawing of Cotter joint shown in Fig.3 **14**

OR

Q.4 Draw Isometric View of different views shown in Fig.-4 **14**

Q.5 Draw development of object shown in Fig.5 **14**

OR

Q.5 A vertical cylinder, diameter of base 45 mm and height 65 mm, is resting on HP on its base. It is penetrated by a horizontal cylinder, diameter of base 35 mm and height 45 mm. Axis of two cylinders bisect each other at right angles. Draw their projections showing on them curves of interpenetration assuming the axis of penetrating cylinder parallel to VP. **14**

****

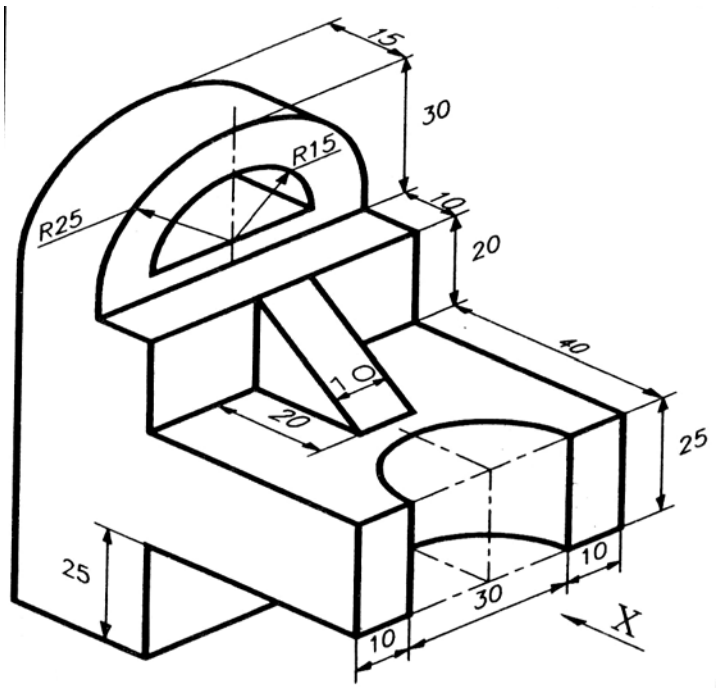

Que-3 Fig.- 1 All Dimensions are in mm

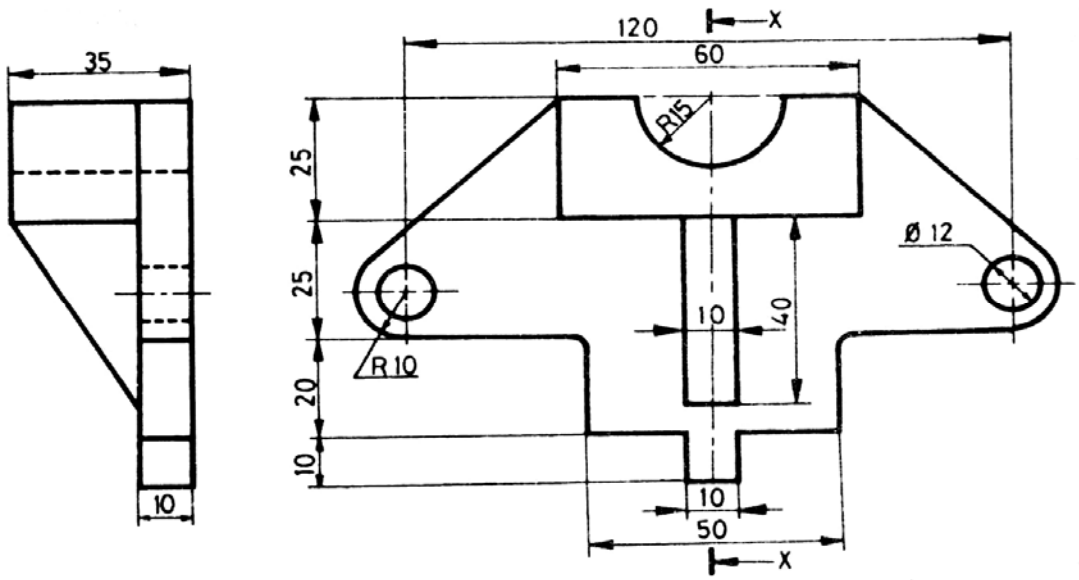

Que-3 Fig.- 2 All Dimensions are in mm

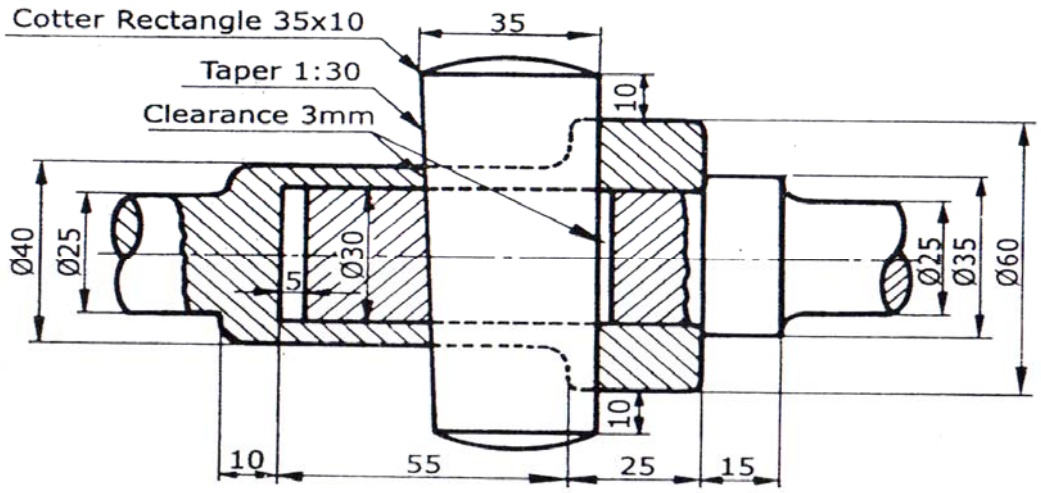

Que-4 Fig.- 3 All Dimensions are in mm

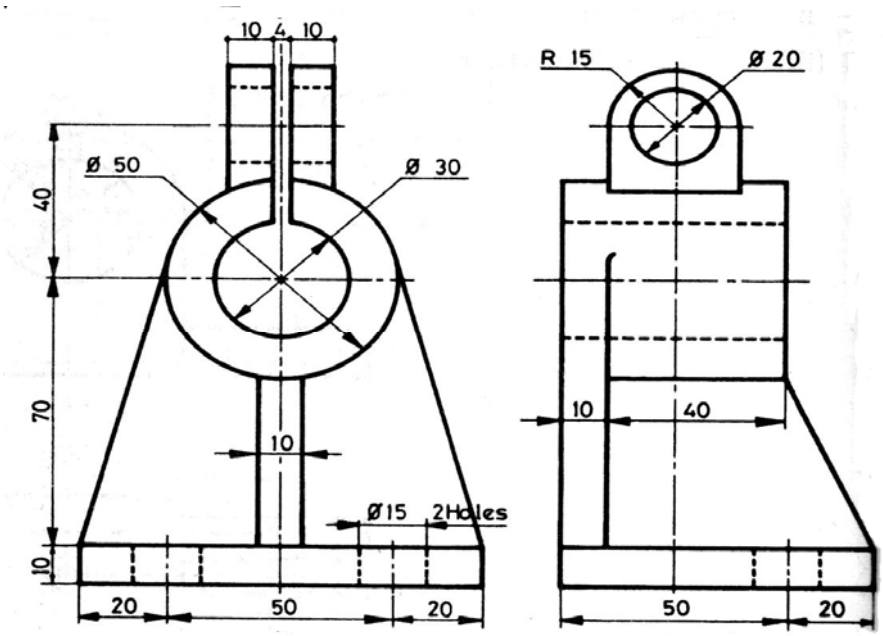

Que-4 Fig.- 4 All Dimensions are in mm

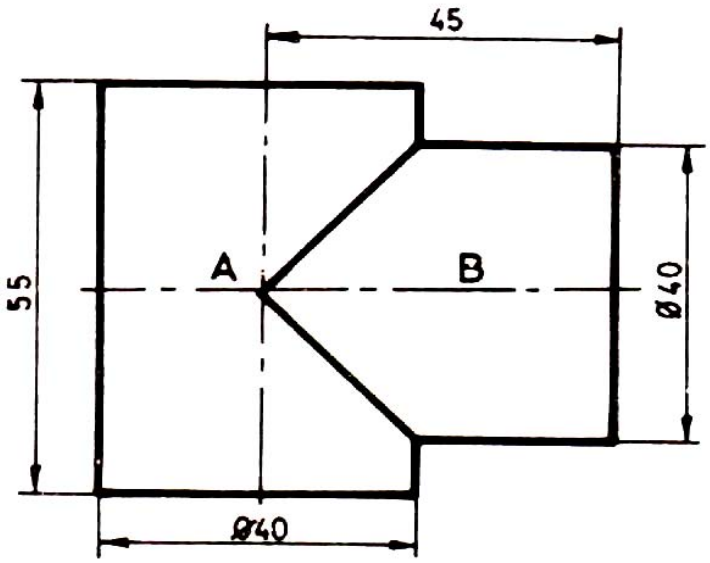

Que-5 Fig.- 5 All Dimensions are in mm