Seat No.: _____ Enrolment No._____

GUJARAT TECHNOLOGICAL UNIVERSITY

Diploma Engineering - SEMESTER–III • EXAMINATION – WINTER • 2014

Subject Code: 3335501 **Date: 25-11-2014**

Subject Name: Fabrication Drafting

Time: 10:30 am - 01:00 pm **Total Marks: 70**

Instructions:

1. **Attempt all questions.**
2. **Make suitable assumptions wherever necessary.**
3. **Figures to the right indicate full marks.**
4. **English version is considered to be Authentic.**

Q.1 (a) Explain format of fabrication drawing with neat sketch. **07**

(b) Draw neat sketch and label different parts of following process equipment **07**

1. Pressure vessel
2. Basket type short tube vertical evaporator

Q.2 (a) Draw following structural set up and fitup **07**

1. Angle to angle joint at 30 º
2. Channel to channel at 45 º

(b) Draw following piping symbols **07**

1. Piping joint
2. Elbow 45º
3. Reducer
4. Tee
5. Cross
6. Gate valve
7. Stop coke
8. Safety valve
9. Expansion joint
10. Union
11. Elbow turn up
12. Vertical centrifugal pump
13. Dome roof tank
14. Tank

OR

(b) Explain surface roughness symbol with neat sketch. **07**

Q.3 Draw (1) Half sectional elevation (2) L.H.S.V. (3) Top plan of object shown in Fig.-1 using 1 st Angle system. **14**

OR

Q.3 Draw by same method projection of object shown in Fig. 2 : **14**

(1) Sectional Elevation, Take section along X-X
(2) RHSV
(3) Top Plan

Q.4 Draw detail drawing of Knuckle joint shown in Fig.3 **14**

OR

Q.4 Draw Isometric Projection of different views shown in Fig.-4 **14**

Q.5 Draw development of object shown in Fig.-5 **14**

OR

Q.5 Two unequal size pipes, main pipe vertical and of 80 mm diameter and branch pipe inclined at 60º to vertical and of 50 mm diameter, are connected with their axes offset and parallel to V.P. Axis of branch pipe is nearer to the observer by 15 mm as compared to the axis of the vertical main pipe. Draw **14**

the projections along with curves of intersection.

****

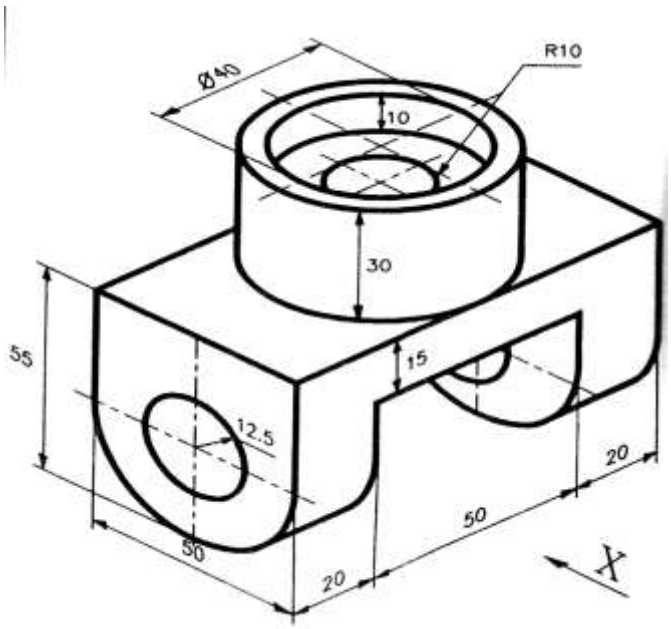

Que-3 Fig.- 1 All Dimensions are in mm

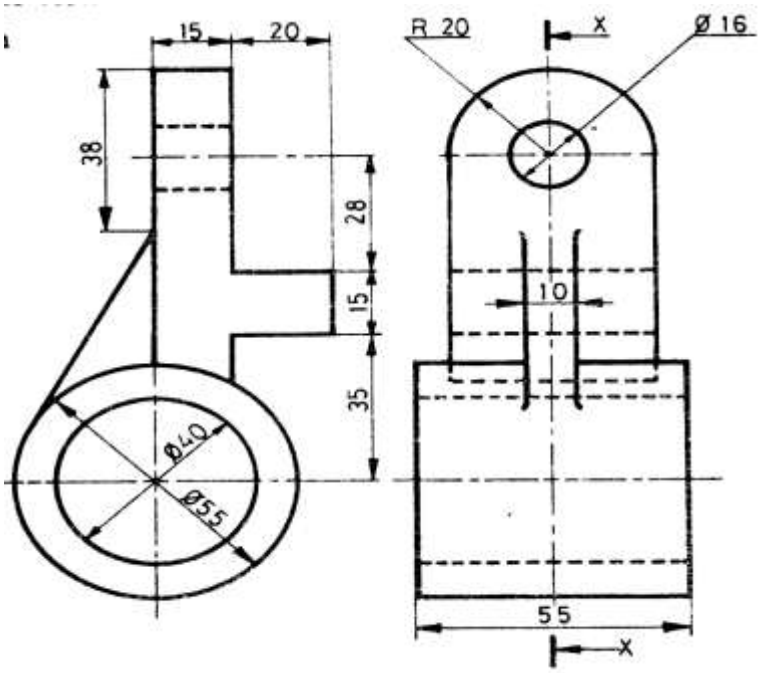

Que-3 Fig.- 2 All Dimensions are in mm

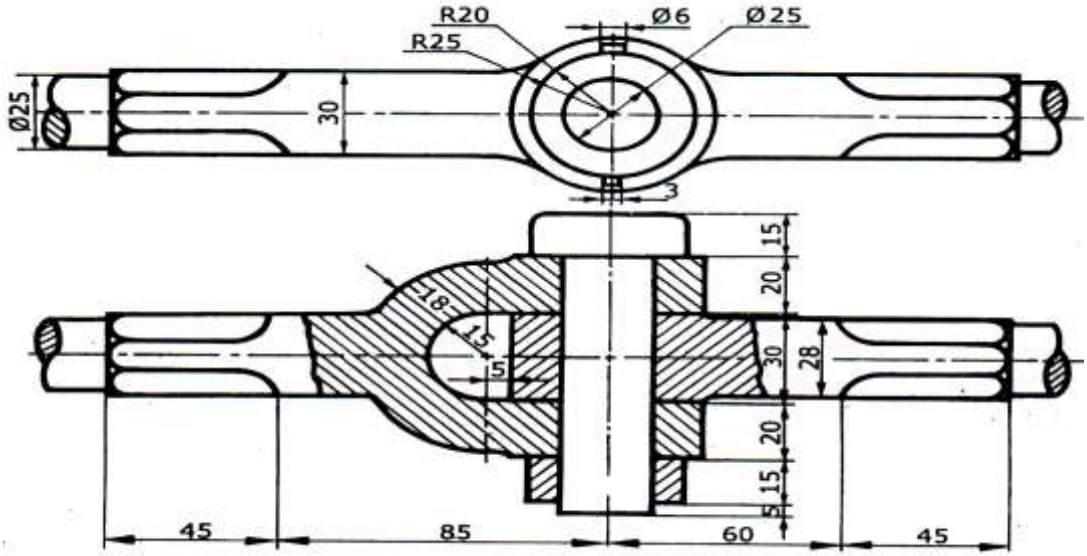

Que-4 Fig.- 3 All Dimensions are in mm

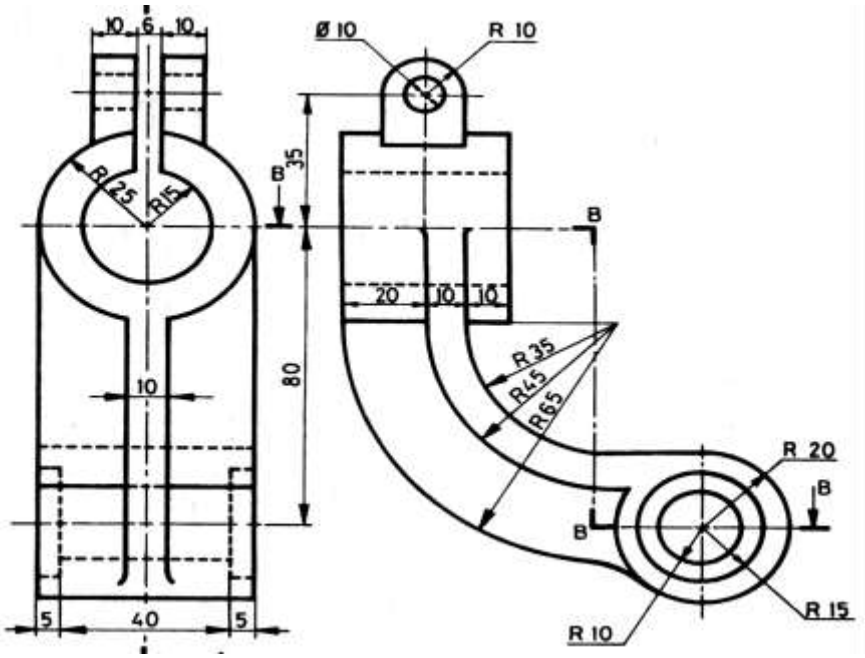

Que-4 Fig.- 4 All Dimensions are in mm

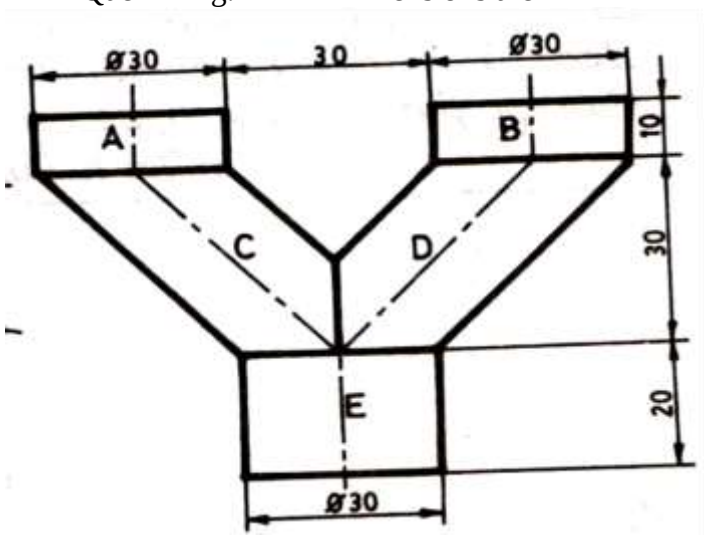

Que-5 Fig.- 5 All Dimensions are in mm