Seat No.: _____ Enrolment No._____

GUJARAT TECHNOLOGICAL UNIVERSITY

M.E Sem-I Remedial Examination April 2010

Subject code: 710707

Subject Name: MODERN POWER SYSTEM PROTECTION

Date: 09 / 04 / 2010 **Time: 12.00 noon – 02.30 pm**

Total Marks: 60

Instructions:

1. **Attempt all questions.**
2. **Make suitable assumptions wherever necessary.**
3. **Figures to the right indicate full marks.**

Q.1 (a) **06**

Draw the flow chart of LINKNET structure for co-ordination of over current relays.

(b) **06**

Fig. 1 shows a single line diagram of power system network. Using flow-chart of LINKNET structure, prepare a table which indicates the value of Node, End, Next, List and Far.

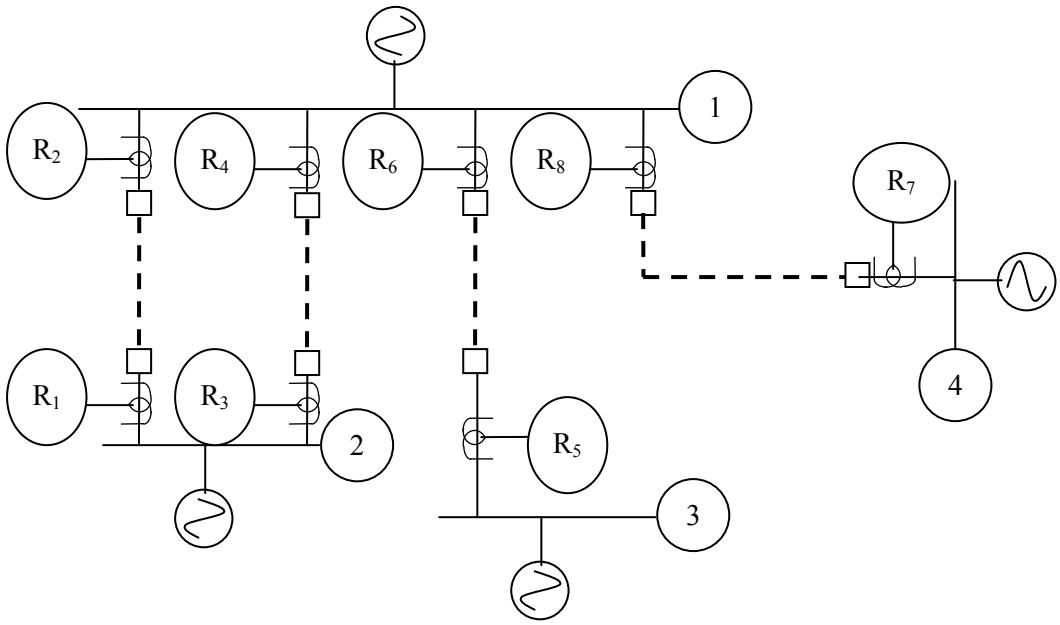

Fig. 1 Single line diagram of power system network

Q.2 (a) **06**

State the benefits of digital relays with reference to electromechanical, static and microprocessor based relays.

(b) **06**

Explain the following terms with reference to digital relays.

(i) Anti Aliasing Filter

(ii) Sampling frequency

OR

(b) **06**

Draw the functional block diagram of basic components of a digital relay. Also, explain the function of surge protection circuits.

Q.3 (a) **06**

Explain the following terms with reference to reclosing relays.

(i) Instantaneous trip lockout
(ii) Intermediate Lockout
(iii) Selective reclosing

(b) **06**

Explain the working of single-shot solid state reclosing relay.

OR

Q.3 (a) **06**

Explain the following terms with reference to multi-shot microprocessor based reclosing relays.

(i) Watchdog timing
(ii) Self-testing
(iii) Failure alarm

(b) **06**

What do you mean by "Synchronism Check". Compare phasing voltage synchronism check characteristic with angular synchronism check characteristic.

Q.4 (a) **06**

Explain the following problems that occur in the protection of transmission lines due to the presence of series capacitors.

(i) Phase impedance unbalance
(ii) Transient phenomena
(iii) Sub synchronous resonance

(b) **06**

Why does distance relay overreaches and underreaches in case of the protection of series compensated transmission lines?

OR

Q.4 (a) **06**

What is the apparent impedance seen by a distance relay during current inversion problem when series compensation is given at

(i) the middle of the transmission line
(ii) the end of the transmission line

(b) **06**

Explain the directional comparison scheme used for the protection of series compensated transmission line.

Q.5 (a) **06**

Explain, with schematic diagram, the concept of Fourier analysis based full cycle window relay algorithm.

(b) **06**

Explain the concept of following techniques with reference to relay algorithms.

(i) Differential equation based technique
(ii) Least square error based technique

OR

Q.5 (a) **06**

Explain following criteria which must be considered during a design of load-shedding schemes for specific systems.

(i) Number of load-shedding steps.
(ii) Size of the load shed at each step.

(b) **06**

Explain in brief the working of digital frequency relays. What is the effect of location of frequency relays.

****