Seat No.: _____ *Enrolment No._____*

GUJARAT TECHNOLOGICAL UNIVERSITY

M.E Sem-I Remedial Examination April 2010

Subject code: 711508

Subject Name: Prestressed Concrete

Date: 09 / 04 / 2010 **Time: 12.00 noon – 02.30 pm**

Total Marks: 60

Instructions:

1. **Attempt all questions.**
2. **Make suitable assumptions wherever necessary.**
3. **Figures to the right indicate full marks.**
4. **Use of IS 1343 and IS 456 is permitted.**

Q-1 A post tensioned girder of 30 m span is to carry live load of 12 kN/m. Design the girder for limit state of collapse. Sketch the cable profile.Endblock need not be designed. **18**

Q-2 What is end block? Show typical stress distribution within end block. Sketch typical diagram showing equivalent prisms. **06**

OR

Q-2 Why prestress loss occurs in a prestressed concrete? How does it differ in case of pre-tensioned and post- tensioned beams? **06**

Q-3 **(a)** Explain following terms in conjunction with prestressed concrete. **04**

- Concordant cable profile
- Transfer stage

(b) A prestress concrete beam of cross section 200 mm width and 450 mm depth has 9 m span and is stressed by a parabolic cable at 400 kN force keeping zero eccentricity at support and 100 mm eccentricity at mid span. The beam has to carry two point loads each of 25 kN acting at 3.0 m spacing. Find short term and long term deflection. The concrete grade is M40 and creep coefficient is 1.6. Losses in prestress are 20 %. **08**

OR

Q-3 **(a)** Enlist different post tensioning anchorage systems. Explain any two with sketches. **04**

(b) Design and detail the end block of a post-Tensioned girder with c/s 300 x 900 mm.The girder is to be prestressed by 2 cables carrying prestressing force 900 kN each. The c.g. of top cable is at 200 mm below top and other cable is at 300 mm below it. Take f_{ck}=45 MPa. **08**

Q-4 **(a)** A simply supported post tensioned beam of cross section 4200 x 600 mm and 15 m span is prestressed with 300 mm^2 prestressing wires. The wires are placed at eccentricity of 150 mm below centroidal line at center of span and 50 mm eccentricity above centroidal line at ends, in parabolic profile. It carries an initial prestress of 1150 N/mm^2.Calculate the percentage loss of stress if, f_{ck}= 40 MPa, f_p = 1600 MPa, Relaxation of steel = 5% , Anchorage slip = 2.0 mm. assume other data as per IS 1343. **06**

(b) Design a non cylindrical pipe of 600 mm dia. for water supply at working pressure 1.25 N/mm^2. Find the pitch of 2 mm dia. wires if initial prestress is to be limited to 1200 N/mm^2.Take cube strength at transfer = 25 N/mm^2.Residual compression 2 N/mm^2.Find safety factor against cracking at working stage. Losses are 15 %.cube strength at working stage is 40 N/mm^2. **06**

OR

Q-4 **(a)** Find maximum stresses developed in the pre-cast and in situ cast concrete for the composite bridge deck at service stage for the following data. Girders are unproped. **06**

- Span of deck slab : 15 m
- Cross section of precast prestressed I girders : As per fig.1
- Spacing of I girders : 750 mm
- Thickness of top slab : 120 mm
- Form work load : 0.2 kN/m
- Compressive prestress in the girder: 15 N/mm^2 at top and zero at bottom.
- Modular ratio of cast in situ to precast concrete : 0.8

(b) A continuous girder shown in the fig.2 is prestressed by a parabolic cable with effective force 500 kN.Check whether cable is concordant or not. Locate the pressure line if girder supports imposed load of 5.6 kN/m.The eccentricities are 100 mm at midspan and 200 mm at support. **06**

Q-5 Design a one way post tensioned slab for a bridge deck to carry imposed load of 20 kN/m^2 over a span of 12 m.Post tensioned cables which can transfer 500 kN force at transfer stage are to be used. Use M40 concrete. Loss ratio is 0.8.Check ultimate moment of resistance only. **12**

OR

Q-5 **(a)** The **fig.3** shows c/s of a simply supported post tensioned girder of 12 m span. The cable has parabolic profile with eccentricity 300 mm at midspan and zero at support locations. Initial prestressing force is 1200 kN and Losses are 15 %.The Live load is 15 kN/m.Grade of concrete is M40. **06**

Find

(a) Cracking Moment

(b) Location of pressure line at transfer and service stage

(c) Stress distribution at midspan and support section using P_line Location.

(b) Find the ultimate moment of resistant of bonded post tensioned girder cross section shown in the fig.3.if it is prestressed using 1500 mm^2 steel with an effective stress level 1150 N/mm^2 .The ultimate tensile strength of steel is 1800 N/mm^2 and concrete grade is M50. **06**

****

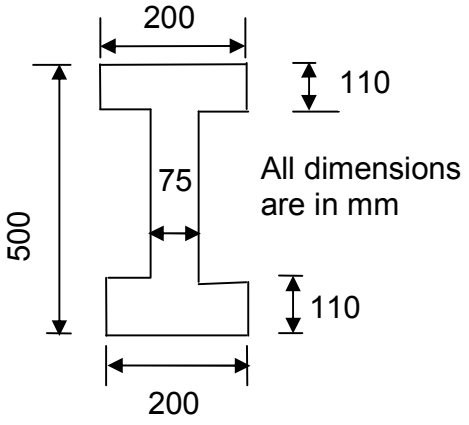

Fig. 1 Q-4(a) OR

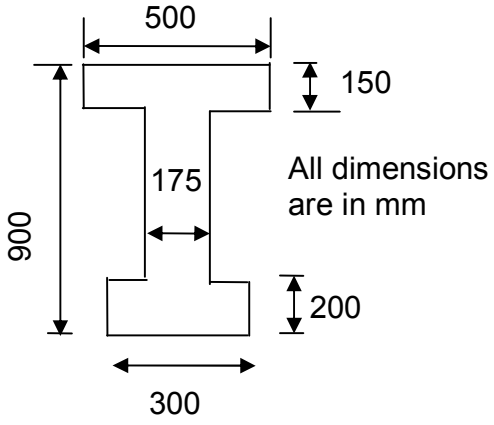

Fig. 3 Q-5(a)& (b) OR

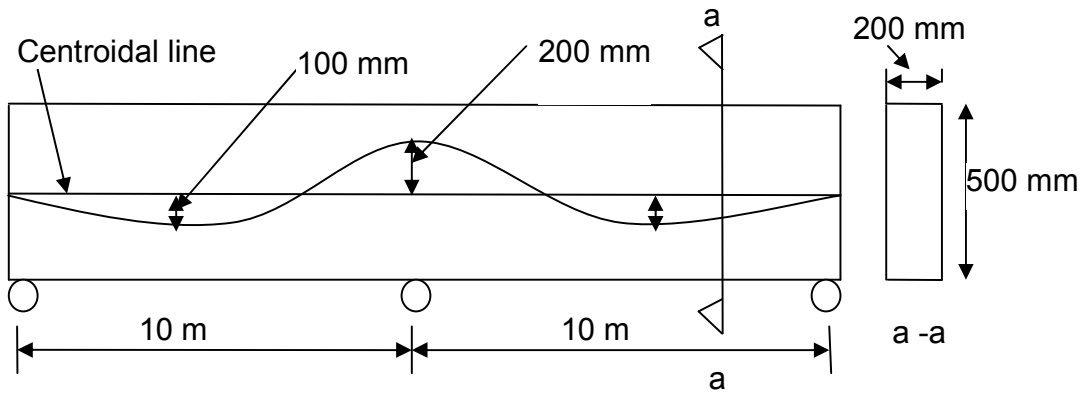

Fig. 2 Q-4(b) OR