Seat No.: _____ Enrolment No._____

GUJARAT TECHNOLOGICAL UNIVERSITY

M.E Sem-I Examination January 2010

Subject code: 712106

Subject Name: Modeling Simulation and Computer Application

Date: 29 / 01 / 2010 **Time: 12.00 – 2.30 pm**

Total Marks: 60

Instructions:

1. **Attempt all questions.**
2. **Make suitable assumptions wherever necessary.**
3. **Figures to the right indicate full marks.**

Q.1 **(a)** Classify different methods of representation of models giving example of each one. **04**

(b) Explain concept of system variables and explain their importance **04**

(c) Giving examples, explain static and dynamic systems **04**

Q.2 **(a)** Write in brief about analogous representation of models. Explain why and when do we use analogous representation **04**

(b) A practical system is simplified as shown in figure-1; develop a model using blocks available in MATLAB SIMULINK. And write the commands to be given at command window for running successful running of the program **08**

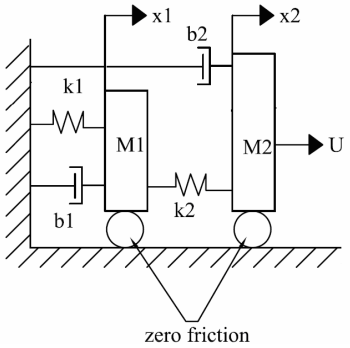

Figure-1 (Q.2 b)

OR

(b) Give a physical model of an automobile. Also carry out modeling of its suspension system deriving its system equations in matrix form. **06**

Q.3 **(a)** Give physical model of a mechanical accelerometer and derive only its system equation **06**

(b) What do you understand by stochastic systems? Explain giving examples **06**

OR

Q.3 **(a)** Write an interactive MATLAB program giving explanation of each command line for simulation of the automobile suspension system described in Q.2 (b). **06**

(b) Give physical model of an inverted pendulum mounted on a moving mass. Assume mass of the pendulum to be concentrated on the tip of the pendulum and derive only its system equation **06**

Q.4 **(a)** For modeling mechanical systems, describe idealized translational passive elements: Mass, spring and damper elements. Also give the analogous electrical circuit elements for each of them **04**

(b) Model a printer belt drive system with an objective of determining the effect of the belt spring constant "k". Assume the radius of the pulleys as r, the angular rotation of the motor shaft as θ and angular rotation of the driven pulley as θ_p. The mass of the printing device as m and its position as y(t). A light sensor is used to measure y and the output of the sensor is voltage $V_1 = k_1 * y$; where k_1 is sensor constant. The controller provides an output voltage $V_2 = - k_1 * k_2 (dy/dt)$. Take $J=(J_{Motor} + J_{Pulley})$, R as the field resistance, K_m as motor constant and b as the motor-pulley friction factor. **08**

OR

Q.4 **(a)** Write short note on Image processing Toolbox of MATLAB **04**

(b) Model a disk drive read system by considering an input as a force at motor mass M_1. Write a state space model for this two mass system **08**

Show the effect of the flexure, which is made up of spring steel material, in order to have rapid movement of a light weight arm. Take the following system parameters.

(i)	Motor mass	: M_1
(ii)	Head mass	: M_2
(iii)	Flexure spring stiffness	: k
(iv)	Friction constant at M_1 & M_2	: b_1 and b_2 respectively.
(v)	Motor constant	: K_m

Q.5 Write short notes **any three** **12**

(i) Linear Feedback shift register
(ii) Linear Congruential generator
(iii) Mersenne Pseudo random number generator
(iv) Monte-Carlo Simulations
(v) Various Simulation software used in the field of Electrical Engineering

****