Seat No.: _____ Enrolment No._____

GUJARAT TECHNOLOGICAL UNIVERSITY

M.E Sem-II Examination July 2010

Subject code: 720803

Subject Name: Robotic Engineering

Date: 07 /07 / 2010 **Time: 11.00am – 1.30pm**

Total Marks: 60

Instructions:

1. **Attempt all questions.**
2. **Make suitable assumptions wherever necessary.**
3. **Figures to the right indicate full marks.**

Q.1 **(a)** Explain Different Robot Configurations with Figure. **06**

(b) Explain with Example "Forward and Inverse kinematics". **06**

Q.2 **(a)** Explain "Robot Control System". **06**

(b) Explain 'Roll, Pitch & Yaw (RPY)' angle configuration. **06**

OR

(b) Explain "Different types of Gripper Mechanisms". **06**

Q.3 **(a)** Fig. (a) Shows the linkage mechanism and dimensions of a gripper used to handle a work part for a machining operation. Suppose it has been determined that the gripper force is to be 100 N. Compute the required actuating force to deliver this force of 100 N. **06**

All Dimensions are in mm.

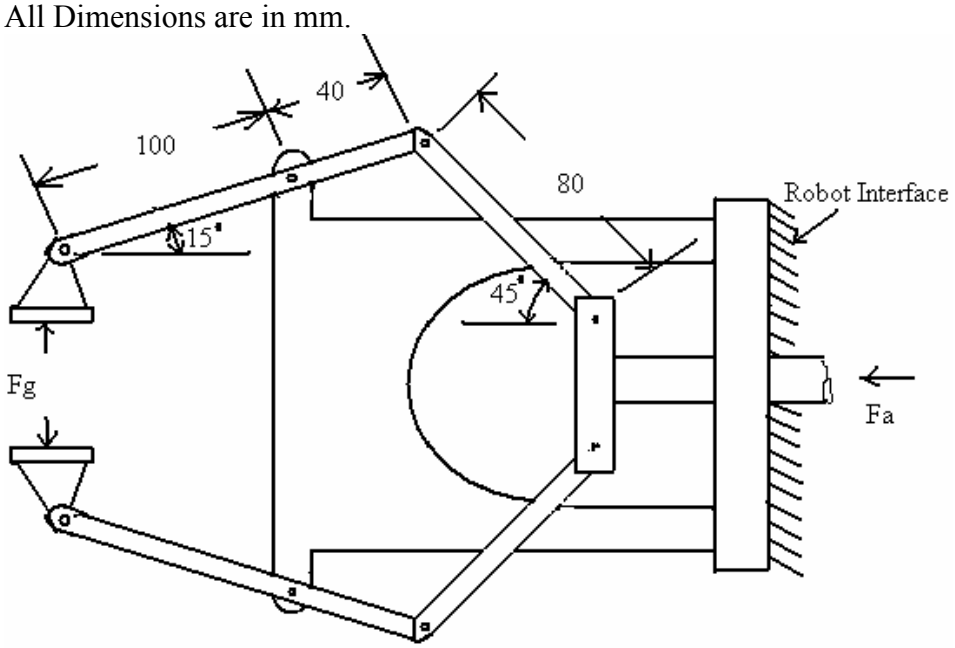

Fig. (a)

(b) Explain "D–H representation of Forward kinematics". **06**

OR

Q.3 **(a)** Explain "Stepper Motor" in Control System. **06**

(b) Fig. (b) Shows 3 – D.O.F. articulated robot arm. Do Forward Kinematic analysis using D – H. **06**

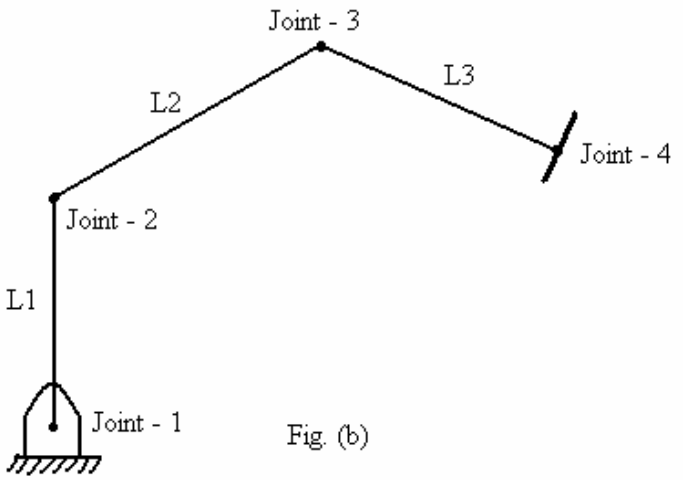

Fig. (b)

Q.4 **(a)** Explain Desirable Features of Sensors. **06**

(b) Explain Tactile Sensors. **06**

OR

Q.4 **(a)** Explain with neat sketch "Charged Coupled Device (CCD) in Machine Vision System". **06**

(b) Explain Robot Application in "Material Transfer & Machine Loading / Un Loading System". **06**

Q.5 **(a)** Explain "Remote Center Compliance (RCC) Device" for Assembly Operation. **06**

(b) Explain "IN-LINE ROBOT CELL DESIGN". **06**

OR

Q.5 **(a)** Explain "Lead Through Programming Methods". **06**

(b) Explain "Error Detection & Recovery" in robot cell design. **06**

****