Seat No.: _____ Enrolment No._____

GUJARAT TECHNOLOGICAL UNIVERSITY

M.E Sem-II (Mech. Machine design) Examination July 2010

Subject code: 720901

Subject Name: Finite Element Method

Date: 05 /07 /2010 **Time: 11.00am – 1.30pm**

Total Marks: 60

Instructions:

1. **Attempt all questions.**
2. **Make suitable assumptions wherever necessary.**
3. **Figures to the right indicate full marks.**

Q.1 **(a)** Write the advantages and disadvantages of Finite Element Method. **04**

(b) What is the basis for discretization of a physical problem in FEA? Explain with the help of suitable illustrative examples. **04**

(c) With the help of neat sketches and illustrative examples, explain the plane stress and plane strain conditions. **04**

Q.2 **(a)** Sketch the FEA model showing the boundary conditions and type of element for the following: **06**

i) A long octagonal pipe with circular hole subjected to internal pressure.

ii) Belleville spring

(b) Determine the displacements of nodes of the spring system shown in figure 1 using minimum potential energy method. **06**

$k_1 = k_3 = 20$ N/mm, $k_2 = 10$ N/mm, $F_2 = 20$ N, $F_4 = 40$ N

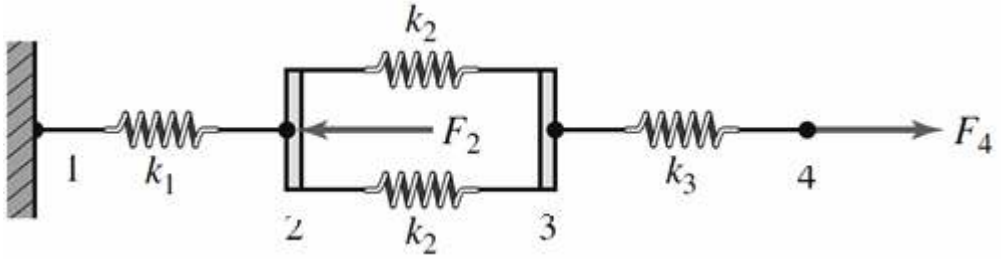

Figure 1

OR

(b) Determine the displacements of nodes of the spring system shown in figure 1 using direct stiffness method. **06**

Q.3 **(a)** For the beam shown in figure 2, determine the displacements and the slopes at the nodes. Let $E = 210$ GPA, $I = 2 \times 10^{-4}$ m^4. **06**

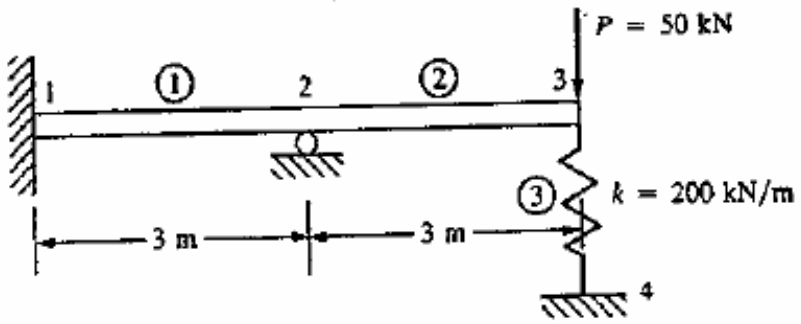

Figure 2

(b) For the axially loaded bar as shown in figure 3, determine the nodal displacements, element stresses and reaction forces. **06**

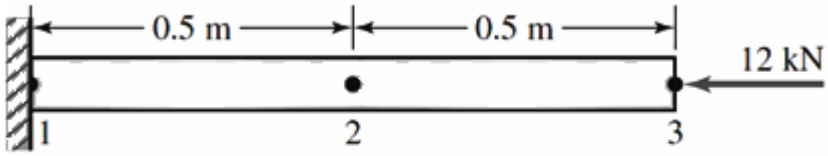

$E = 207$ GPa $\quad A = 500$ mm^2

Figure 3

OR

Q.3 **(a)** For the axially loaded bar as shown in figure 3, determine the nodal displacements, element stresses and reaction forces using penalty approach. **06**

(b) The thin plate of uniform thickness 20 mm, is as shown in Figure 4. In addition to the self weight, the plate is subjected to a point load of 400N at mid-depth. The Young's modulus $E = 2 \times 10^5$ N/mm^2 and unit weight $\rho = 0.8 \times 10^{-4}$ N/mm^3. Analyse the plate after modeling it with two elements and find the stresses in each element. **06**

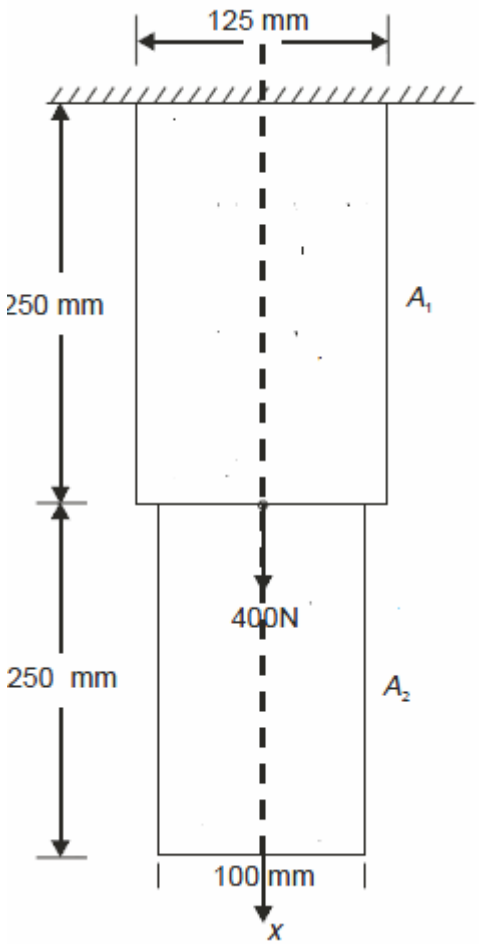

Figure 4

Q.4 (a) Find the displacements at nodes, stresses in members, and reactions at supports for the truss shown in figure 5. The Young's modulus E = 20 × 10^6 N/cm^2, Cross sectional area of element 1 = 5 cm^2 and of element 2 = 10 cm^2. **06**

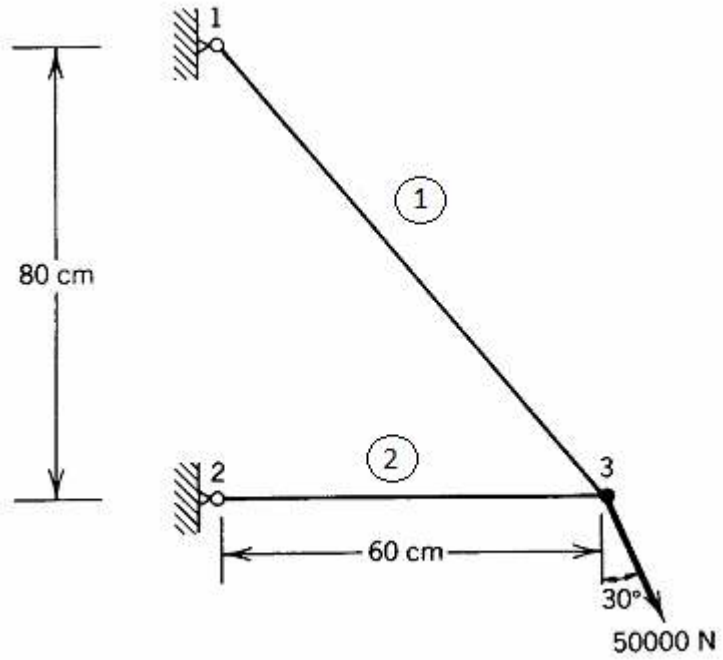

Figure 5

(b) Derive the shape functions in terms of natural coordinate system for an eight noded quadrilateral element using inspection method. **06**

OR

Q.4 (a) Find the displacements at nodes, stresses in members, and reactions at supports for the truss shown in figure 5. All elements are subjected to a uniform temperature rise of 50 ^{0}C. Take, E = 200x10^3 N/mm^2 and α = 12 x 10^{-6} /°C. **08**

(b) Derive the shape functions in terms of natural coordinate system for a four noded one dimensional element using Lagrange polynomial. **04**

Q.5 (a) Determine the temperature distribution in the square fin shown in figure 6 using two elements. Assume that the convection heat loss occurs from the end of the fin. Model the problem using two elements. **06**

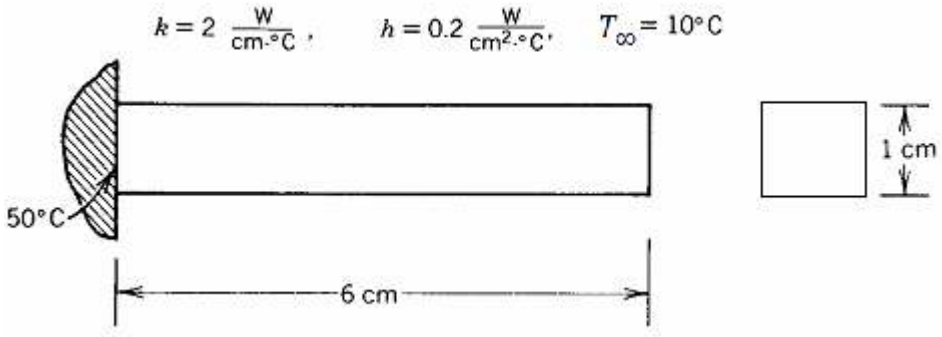

Figure 6

(b) Determine the temperature distribution through the composite wall shown in figure 7 when convection heat loss occurs from the left surface. Assume a unit surface area. **06**

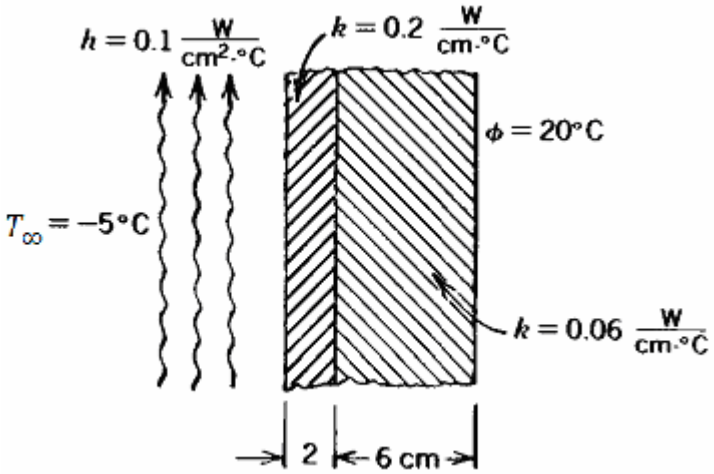

Figure 7

OR

Q.5 **(a)** Calculate the surface temperature for the wall shown in figure 8. Convection heat transfer occurs on both surfaces. Assume a unit surface area. **06**

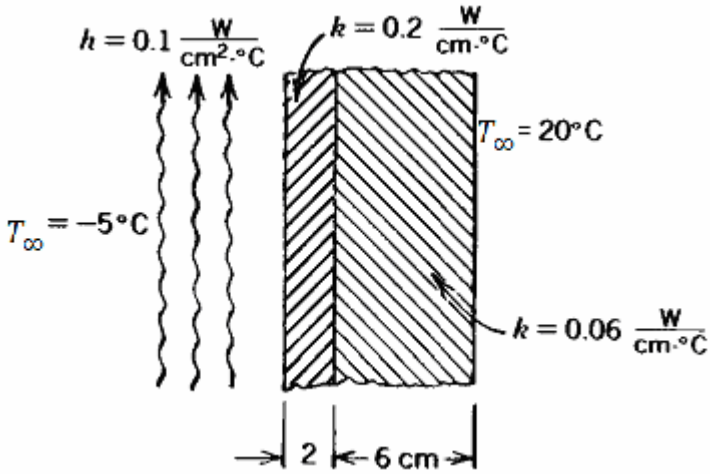

Figure 8

(b) Determine the Cartesian coordinate of the point P ($\xi = 0.5$, $\eta = -0.4$) for the element shown in figure 9. Find the temperature at point P. The nodal temperature vector $= [35 \quad 42 \quad 55 \quad 40]^T$ ^{0}C. **06**

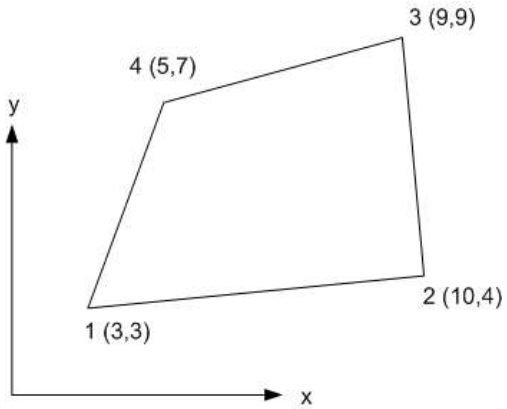

Figure 9

****