Seat No.: _____ Enrolment No._____

GUJARAT TECHNOLOGICAL UNIVERSITY

M.E Sem-II Examination July 2010

Subject code: 720906
Subject Name: Robotics

Date: 08 / 07 /2010 **Time: 11.00am – 1.30pm**
Total Marks: 60

Instructions:

1. **Attempt all questions.**
2. **Make suitable assumptions wherever necessary.**
3. **Figures to the right indicate full marks.**

Q.1 **(a)** Answer all. **06**

1 How are robots different than conventional machine tools?
2 List criterion for robot selection.
3 Explain characteristics of industrial robots.

(b) Given the world coordinates for RR:R robot Fig.1 as x=300mm,z= 400 mm and $\alpha=30^0$and given that link have values L_1 = 350 mm, L_2 = 250 mm and L_3 = 50 mm, determine joint angles Θ_1 Θ_2 and Θ_3 . **06**

Q.2 **(a)** Suppose, that we now desire to place the origin of the hand of a spherical robot at $[3,4,7]^T$. Calculate the joint variables of the robot. **06**

(b) The end point of a link of manipulator is at P= $[2\ 2\ 6\ 1]^T$ the link is rotated by 90^0 about x-axis ,then by -180^0 about its own z-axis and finally by 90^0 about its own y-axis. Find the resulting homogeneous transformation matrix and final location of end point. **06**

OR

(b) A point P $[7\ 3\ 2]^T$ is attached to the frame ($\bar{n}$,$\bar{o}$,$\bar{a}$) and is subjected to transformation matrix described next. Find the coordinates of the point relative to the reference frame after conclusion of transformation. **06**

(1) Rotations 90^0 about z-axis
(2) Followed by a rotation of 90^0 about y-axis
(3) Followed by translation of [4,3,–7]

Q.3 **(a)** Explain why homogeneous coordinates are required in modeling of robotic manipulators. **06**

(b) A 3 –DOF articulated arm is considered as shown in Fig.2 obtain the transformation matrix for the endpoint. **06**

OR

Q.3 **(a)** Explain D–H representation for forward kinematics of robots. **06**

(b) Formulate the forward kinematic model of the three –degree if freedom (RPP) manipulator arm shown in Fig.3. **06**

Q.4 **(a)** Differentiation between Lagrangian mechanics and Newtonian mechanics. Illustrate Lagrangian mechanics. **06**

(b) A five kg rectangular block is gripped in the middle and lifted vertically at a velocity of 1 m/s. If it is accelerated to this velocity at27.5 m/s ² and coefficient of friction between the gripping pads and block is 0.48, Calculate the minimum force that would prevent slippage. **06**

OR

Q.4	**(a)**	Using the Lagrangian method, derive the equation of motion for the two-degree –of freedom robot arm, shown in Figure 4. The center of mass for each link is at the center of the link. The moments of inertia are I_1 & I_2	**06**
	(b)	The gripper as shown in Fig.5 is required to hold a work piece. An actuating force of 500 N is acting vertically downwards resulting in gripping force F_g. Compute the maximum gripping force that can be applied.	**06**
Q.5	**(a)**	It is desired to have the first joint of a six –axis robot go from initial angle of 30^0 to a final angle of 75^0 in 5 seconds using a third –order polynomial , Calculate the joint angle at 1,2,3 and 4 seconds.	**06**
	(b)	Compile a list of sensor that might be used in a robotics system for each sensor give in example with illustration.	**06**
		OR	
Q.5	**(a)**	The second joint of a SCARA manipulator is required to move from Θ_2=30 ^{0}to 150^0 in 5 seconds. Find the cubic polynomial to generate the smooth trajectory for the joint. What is the maximum velocity and acceleration for this trajectory?	**06**
	(b)	Explain characteristics needed for choosing and appropriate sensor for a particular need.	**06**

****

SKETCHES

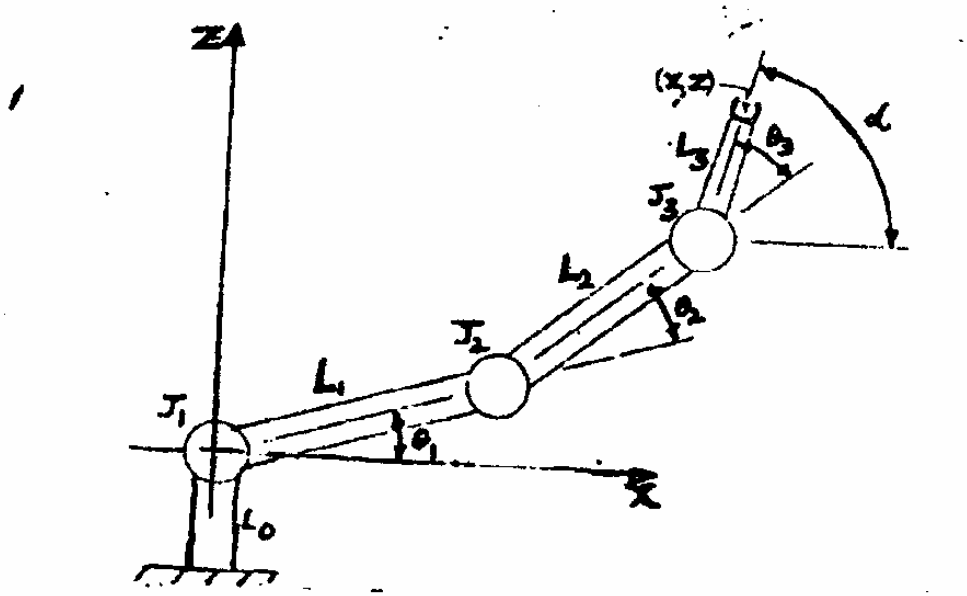

Figure 1

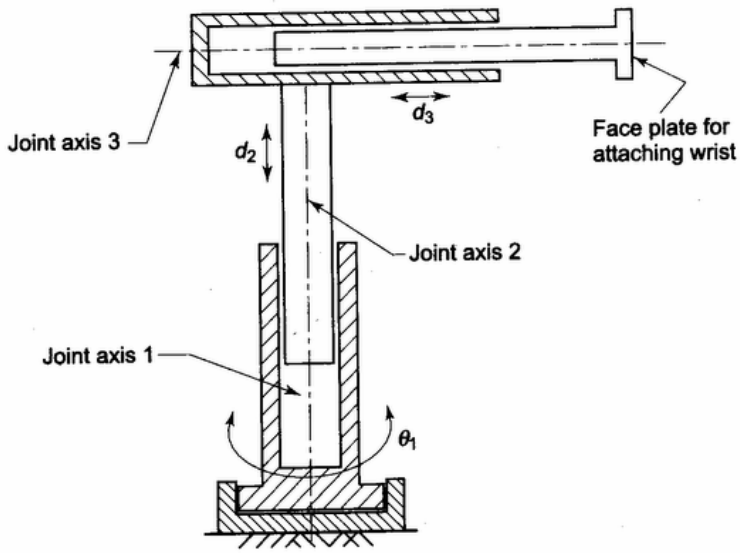

Figure 2

SKETCHES

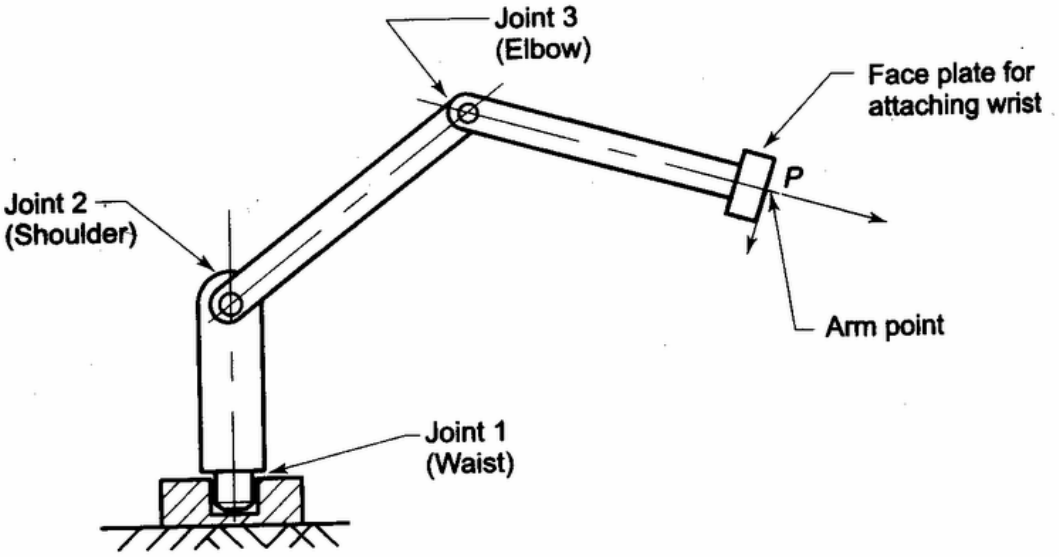

Figure 3

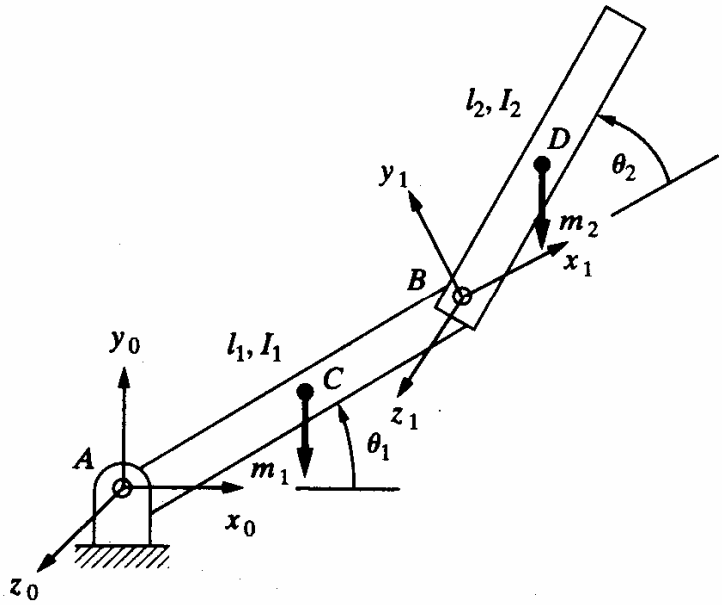

Figure 4

SKETCHES

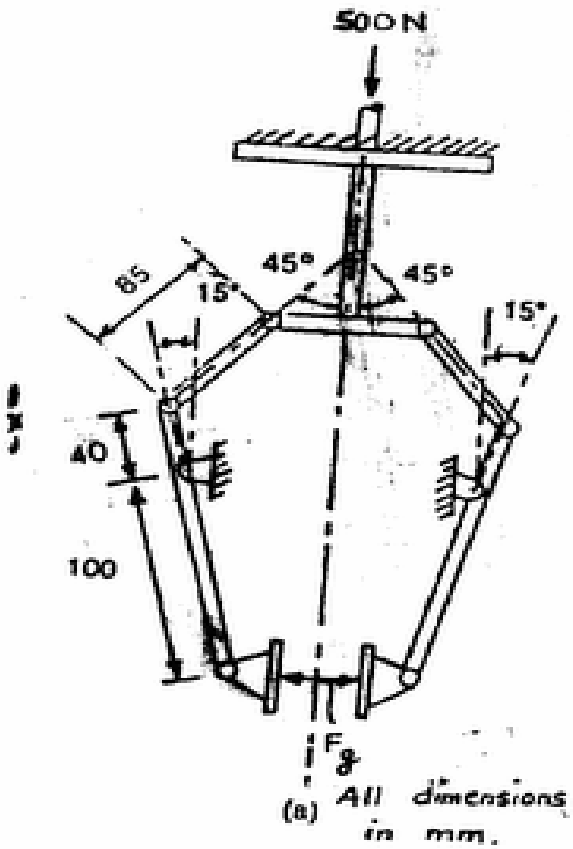

Fig. 5

********** **End of Sketches** **********