Seat No.: _____ Enrolment No._____

GUJARAT TECHNOLOGICAL UNIVERSITY

M. E. IST Semester–Remedial Examination – July- 2011

Subject code: 710801N

Subject Name: Advanced Machine Design

Date:07/07/2011 **Time: 10:30 am – 01:00 pm**

Total Marks: 70

Instructions:

1. **Attempt all questions.**
2. **Make suitable assumptions wherever necessary.**
3. **Figures to the right indicate full marks.**
4. **Use of PSG Design Data book is permitted.**

Q.1 (a) Explain the stress distribution in a solid rotating disc. **04**

(b) **10**

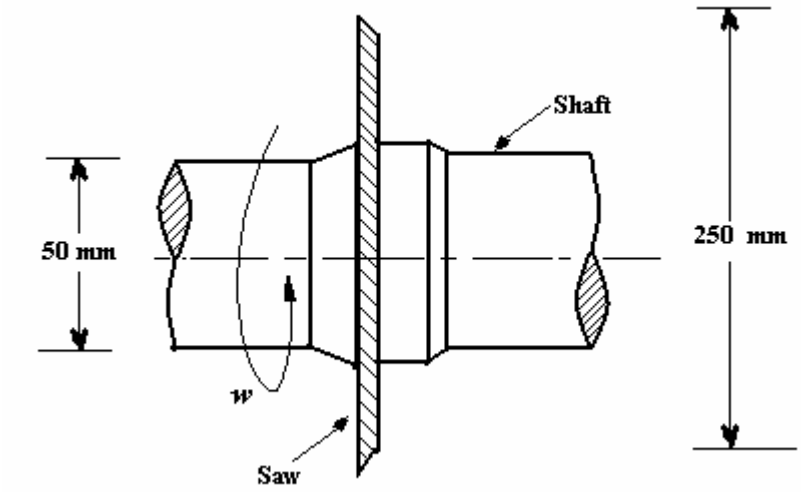

A circular saw in the form of thin disc as shown in figure, rotating at 14000 rpm is used as a rotating blade. The disc is mounted on the shaft. The yield stress for disc material, σ_y = 480 MPa. Determine

(i) Maximum hoop stress in the disc.
(ii) Maximum radial stress in the disc.
(iii) Maximum shear stress in the disc.
(iv) Maximum radial displacement in the disc.

Given: Density of material, ρ =7.8 gm/cm^3, Poisson's ratio, μ = 0.3,
Modulus of elasticity, E = 2 x 10^5 N/mm^2

Q.2 (a) What is Autofrettage? Describe three methods of prestressing the cylinder. What are the advantages of Autofrettage? **07**

(b) A chemical reactions chamber working at a temperature of 600 ^{0}C used steel bolts to tighten two parts. The test on bolt material at this temperature resulted in to strain rates of 3 x 10^{-18} / hr and 2 x 10^{-18} / hr at 30 MPa and 25 MPa stress level respectively. If the bolts are tightened to a stress level of 70 MPa initially, calculate in what time the stress will be reduced to half value. E = 1.4 x 10^5 MPa at 600 ^{0}C. **07**

OR

(b) A 200 mm diameter of C.I. pipe having 12 mm thickness is closely wound with layer of 5 mm diameter steel wire under a tensile stress of 60 N/mm^2. If the water under pressure of 3.5 N/mm^2 is admitted in to pipe. Find the stresses induced in the pipe and the steel wire. **07**

E_C = 1 x 10^5 N/mm^2 = E_P, ν = 0.30, E_S = 2 x 10^5 N/mm^2 = Steel.

Q.3 **(a)** Explain prediction of fatigue life of a ball bearing. **04**

(b) Design a journal bearing (using PSG data book) for centrifugal pump from the following specifications: **10**

Diameter of journal = 75 mm
Speed of journal = 1440 rpm
Load on each journal = 11.5 kN.

OR

Q.3 **(a)** Explain "Porous Bearing". **04**

(b) The following data is given for a hydrostatic thrust bearing: **10**

Thrust load = 500 kN	Film thickness = 0.15 mm
Shaft speed = 720 rpm	Viscosity of lubricant = 160 SUS
Shaft diameter = 500 mm	Specific gravity = 0.86
Recess diameter = 300 mm	

Calculate: (i) Supply pressure..
(ii) Flow requirement in lit/min.
(iii) Power loss in pumping
(iv) Frictional power loss

Q.4 **(a)** Explain the following terms related to Machine Design. **07**

(i) Product life cycle
(ii) Brain storming

(b) Discuss on "Design for rigidity". **07**

OR

Q.4 **(a)** Discuss on "Design for strength". **07**

(b) What do you mean by corrected gearing? In which situation such gears are used? Why? **07**

Q.5 **(a)** Compare the concurrent engineering with traditional engineering. **07**

(b) Discuss on "Quality function deployment" with reference to product design. **07**

OR

Q.5 **(a)** Explain design procedure for the design of hooks for lifting hot metal ladles. Write only on critical stress region and type of hook selection. **07**

(b) Explain safe life v/s fail safe design criteria with suitable examples. **07**