Seat No.: _____ Enrolment No._____

GUJARAT TECHNOLOGICAL UNIVERSITY

M. E. IST Semester–Remedial Examination – July- 2011

Subject code:710904N

Subject Name: Optimization techniques

Date:13/07/2011 **Time: 10:30 am – 01:00 pm**

Total Marks: 70

Instructions:

1. **Attempt all questions.**
2. **Make suitable assumptions wherever necessary.**
3. **Figures to the right indicate full marks.**

Q.1 (a) Use the simplex method to solve the following problem: **07**

Maximise $Z = 30X_1 + 40X_2 + 35X_3$

Subject to $3X_1 + 4X_2 + 2X_3 \leq 90$

$2X_1 + X_2 + 2X_3 \leq 54$

$X_1 + 3X_2 + 2X_3 \leq 93$

$X_1, X_2, X_3 \geq 0$

(b) Maximise $Z = 10X_1 + 15X_2$ **07**

Subject to $2X_1 + X_2 \leq 26$

$2X_1 + 4X_2 \leq 56$

$X_1 - X_2 \geq -5$

$X_1, X2 \geq 0$

Solve the LPP Graphically.

Q.2 (a) What is the difference between a redundant constrain and binding constrain? Does they affect the optimal solution to an LPP? **07**

Also explain the following terms: Slack variables, Artificial variable, basic feasible solution and feasible solution.

(b) Obtain the dual of the following LPP: **07**

Maximise $Z = 3X_1 + 5X_2 + 7X_3$

Subject to $X_1 + X_2 + 3X_3 \leq 10$

$4X_1 - X_2 + 2X_3 \geq 15$

$X_1, X_2 \geq 0$, X_3 is unrestricted in sign

OR

(b) A finished product must weigh exactly 150 grams. The two raw materials used in manufacturing the product are A, with a cost of Rs 2 per unit and B with a cost of Rs 8 per unit. At least 14 units of B and not more than 20 units of A must be used. Each unit of A and B weighs 5 and 10 grams repectively. How much of each type of raw material should be used for each unit of the final product in order to minimize the cost? Use simplex method to solve the LPP. **07**

Q.3 (a) Maximise $Z = 30X_1 + 30X_2$ **07**

Subject to $4X_1 + 8X_2 \leq 32$

$6X_1 + 5X_2 \leq 30$

$X_1, X_2 \geq 0$ and integer

Solve the Integer-programming problem using cutting plane algorithm.

Solution to the LP relaxation using simplex method is given in the table below:

Basis		bj	X_1	X_2	S1	S_2
300	X_2	18/7	0	1	3/14	-1/7
200	X_1	20/7	1	0	-5/28	2/7
	Cj		200	300	0	0
Δj	Zj-Cj	1140/7	0	0	15/14	30/7

(b) Explain integer linear programming and also explain a pure and a mixed integer linear programming problem and give an example of each. **07**

OR

Q.3 (a) Every linear programming problem has a mirror image in the form of another linear programming problem, called dual. Do you agree? Explain the primal-dual relationship in detail. How is the knowledge of primal-dual relationship beneficial? **07**

(b) The cost to perform different jobs by different workers is given as follows: **07**

WORKER	JOB			
	1	2	3	4
A	45	40	57	67
B	57	42	63	55
C	49	52	48	64
D	41	45	60	55

Obtain optimal assignment of jobs to workers. Use branch and bound method to solve the given integer programming problem.

Q.4 (a) You are given the following network wherein the numbers indicate the distance between various pairs of nodes. Use dynamic programming to determine the shortest path between the origin (shown by symbol 'O') and destination. (shown by symbol 'H') **07**

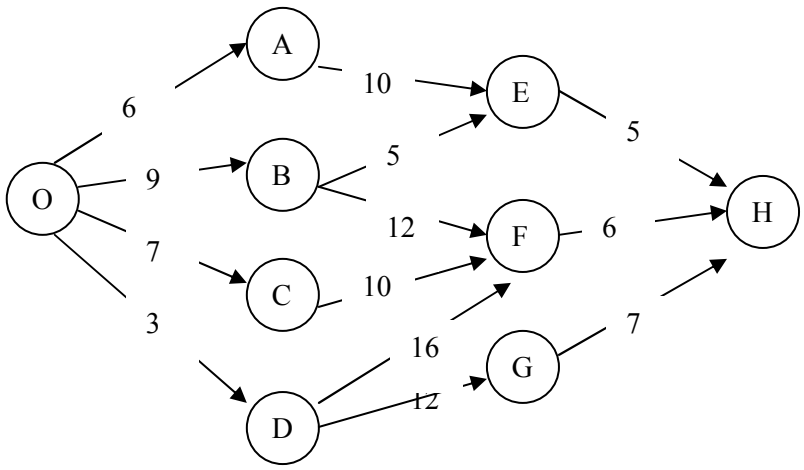

(b) What is dynamic programming.? Explain the steps involved in solution to dynamic programming problems and give some examples where dynamic programming may be used. **07**

OR

Q.4 **(a)** Four types of items are under consideration for loading on a plane, with an unlimited supply of each type. The weights and values of various types of items are given below: **07**

Item	Weight(tons)	Value
A	3	22
B	6	44
C	5	35
D	4	24

Determine as to which items should be loaded on the plane, and in what quantities, if the maximum capacity of the plane is 13 tons and the objective is to maximize the value of the shipment. Give mathematical representation of the problem and solve it by dynamic programming.

(b) A company has trained five salespersons in the past three months, whom it wants to assign to three sales regions:North, West and South. It has been estimated that increases in sales(in lakhs of rupees) over the next year in each region, if each were allocated different number of salesman, are as indicated below. **07**

	Region		
salesperson	North	West	South
0	0	0	0
1	61	36	66
2	86	61	86
3	106	91	96
4	121	126	116
5	136	166	146

Use dynamic programming to determine which allocation would maximize the increase in sales.

Q.5 **(a)** Minimize $f(x,y) = k\, x^{-1}\, y^{-2}$ **07**
Subject to $g(x,y) = x^2 + y^2 - a^2 = 0$.
Find the solution using langrange multiplier method

(b) State the necessary and sufficient conditions for the minimum of a function f(x). **07**
Find the maxima and minima, if any, of the function
$f(x) = 4\, x^3 - 18\, x^2 + 27\, x - 7$

OR

Q.5 **(a)** Minimize $f(Y) = ½(Y_1^2 + Y_2^2 + Y_3^2 + Y_4^2)$ **07**
Subject to $g_1(Y) = Y_1 + 2Y_2 + +3Y_3 + 5Y_4 - 10 = 0$
$g_2(Y) = Y_1 + 2Y_2 + +5Y_3 + 6Y_4 - 15 = 0$
Use the method of constrained variation.

(b) Show that volume of the largest right circular cylinder that can be inscribed in given right circular cone is $4/9^{th}$ the volume of cone. **07**

****