Seat No.: _____ Enrolment No._____

GUJARAT TECHNOLOGICAL UNIVERSITY

M.E Sem-I Regular Examination January / February 2011

Subject code: 712002N

Subject Name: Structural Dynamics

Date: 01 /02 /2011 **Time: 02.30 pm – 05.00 pm**

Total Marks: 70

Instructions:

1. **Attempt all questions.**
2. **Make suitable assumptions wherever necessary.**
3. **Figures to the right indicate full marks.**

Q.1 **(a)** Explain viscously damped forced vibration system in detail. **07**

(b) A simply supported beam of length L and mass m_2 carries a body of mass m_1 at its mid point. Find the lowest natural frequency of transverse vibration. **07**

Q.2 **(a)** Write in detail the steps for model analysis. **07**

(b) Write short note on "Duhamel's Integral". **07**

OR

(b) Explain viscously damped free vibration system in detail. **07**

Q.3 **(a)** The bridge is deflected at mid span by winching the bridge down and suddenly released. For the fundamental frequency it can be considered as a single degree of freedom system. After the initial disturbance the vibration was found to decay exponentially from amplitude of 10 mm to 5.8 mm in three cycles with a frequency of 1.62 Hz. The test was repeated with a vehicle of mass 40000 kg at midspan, and frequency of free vibration was measured to be 1.54 Hz. Find the effective mass, the effective stiffness and damping ratio of the structure. **10**

(b) Elaborate the term "Logarithmic Decrement". **04**

OR

Q.3 **(a)** A light rigid rod of length of length L is pinned at one end O and has a body of mass m attached at the other end. A spring and viscous damper connected in parallel are fastened to the rod at a distance "a" from the support. The system is setup in a horizontal plane: a plan view is shown in figure (1). Assuming that the damper is adjusted to provide critical damping, obtain the motion of the rod as a function of time if it is rotated through a small angle θ_0 and then released. If $\theta_0 = 2^0$ and Undamped natural frequency of the system is 3 rad/s, calculate the displacement 1 s after release. **08**

(b) Explain the term "Logarithmic Decrement" as applied to such a system explained in Q.3 (a) (figure 1), and calculate its value assuming that the damping is reduced to 80% of its critical value. **06**

Q.4 **(a)** Part of structure is shown in fig. 2, can modelled as a torsional system comprising a bar of stiffness 10 kN m/rad and a beam of moment of inertia about the axis of rotation of 50 kg.m^2. The bottom guide imposes a friction torque of 10 N.m. If the beam is displaced through 0.05 rad from its equilibrium position and released, find the frequency of the oscillation, the number of cycles executed before the beam motion ceases and the position of the beam when this happens. **10**

(b) Explain in short vibration with hysteretic damping. **04**

OR

Q.4 **(a)** Write short note on "Vibration Isolation". **07**

(b) Write short note on "Sources of Damping". **07**

Q.5 **(a)** For the study of earthquake a building is idealized as a rigid body of mass M supported on two springs, one giving translation stiffness k and the other rotational stiffness k_T as shown in fig. 3. If I_G is the mass moment of inertia of the building about its mass centre G, write the equation of motion using coordinates x for the translation from the equilibrium position and θ for the rotation of the building. Also determine the frequency equation of the motion. **08**

(b) Explain two degree of freedom model of a structure excited by a force. **06**

OR

Q.5 **(a)** What is Dunkerleys's method? How it is useful to find fundamental natural frequency of multi-degree of freedom system? **07**

(b) What are the approximate methods for obtaining natural frequency and mode shapes? Elaborate any one in detail. **07**

****

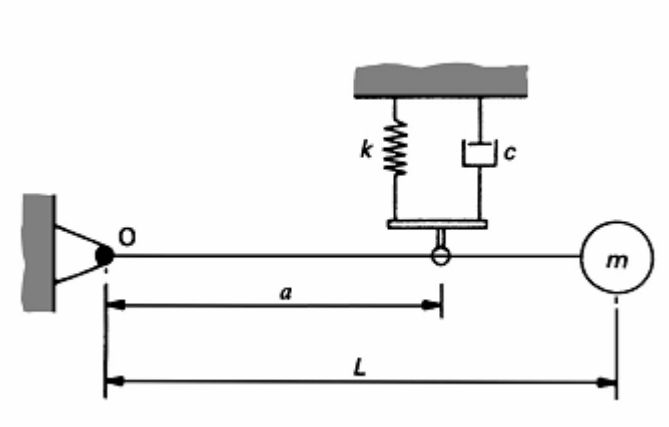

Fig. 1 (OR Q.3 (a))

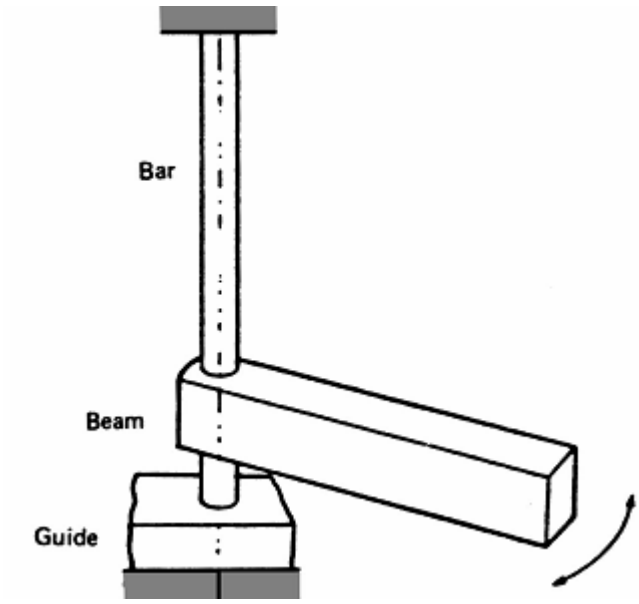

Fig. 2 (Q.4 (a))

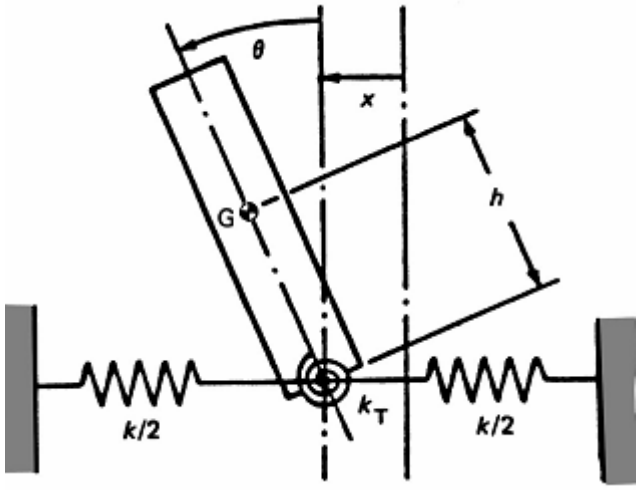

Fig. 3 (Q.5 (a))