Seat No.: _____ Enrolment No._____

GUJARAT TECHNOLOGICAL UNIVERSITY

M.E Sem-II Remedial Examination December 2010

Subject code: 720801 **Subject Name: Finite Element Method**

Date: 18 /12 /2010 **Time: 02.30 pm – 05.00 pm**

Total Marks: 60

Instructions:

1. **Attempt all questions.**
2. **Make suitable assumptions wherever necessary.**
3. **Figures to the right indicate full marks.**

Q.1 **(a)** Discuss and Explain the Steps involved in finite element analysis. **06**

(b) Explain the weighted residual method for finite element formulation. **06**

Q.2 **(a)** Write the Governing equation and boundary conditions used to completely define a rod extrusion problem. Also derive it's weak form. **06**

(b) What is function of displacement model? Discuss significant of selection of displacement model. **06**

OR

(b) Differentiate the following **06**

(1) Transient and Eigen value problems

(2) Completeness and compatibility of elements

Q.3 Using a finite element method for the loaded bar as shown in figure-1, determine the nodal displacements, element stresses, and support reactions using minimum number of elements using elimination approach. Assume the modulus of elasticity as 200 GPa. **12**

OR

Q.3 A Square tapered bar is as shown in figure-2. Model the bar by considering it as made of 3 elements of equal length. Determine the deflection at each node using elimination approach. Assume the modulus of elasticity as 200 GPa. **12**

Q.4 Explain the following. **12**

(i) Explain Constant-Strain Triangle with Isoparametric representation.

(ii) Derive the shape function for linear distribution.

OR

Q.4 For the two-bar truss as shown in figure-3, determine the displacements of node 1 and the stress in element 1-3. E=70 GPa, A=200 mm^2 for both members. **12**

Q.5 **(a)** Define plane stress and plane strain problem with at least two examples of each. **06**

(b) For the fully developed laminar flow between two long parallel plates separated by a distance 2L, The governing equation is **06**

$\mu \frac{d^2u}{dy^2} = \frac{dP}{dx}$, Where μ is the viscosity of fluid.

Derive the finite element form and hence determine the velocity distribution u, for a given constant pressure gradient $\frac{dP}{dx}$.

The boundary conditions are that the fluid velocity is zero at the surface of the plates.

OR

Q.5 **(a)** Explain consistent mass matrix approach for dynamic analysis using finite element with illustrative example. **06**

(b) Consider the quadrilateral element no-1 as shown in figure-4. Evaluate global derivatives of interpolation function (ψ_i) with respect to the coordinates x and y at $(\xi,\eta)=(0,0)$ and (1/2, 1/2) using Isoparametric formulation. **06**

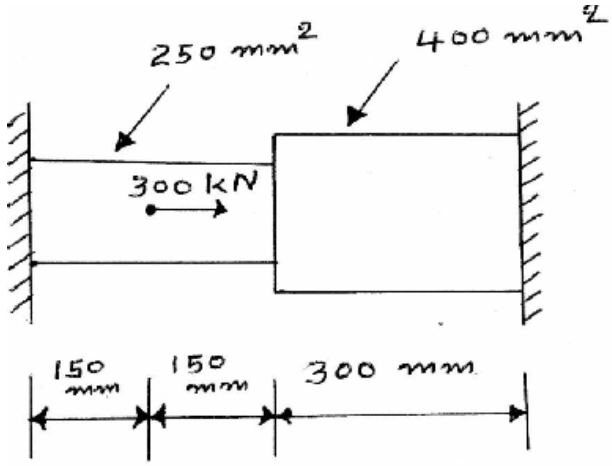

Figure-1 (Q-3)

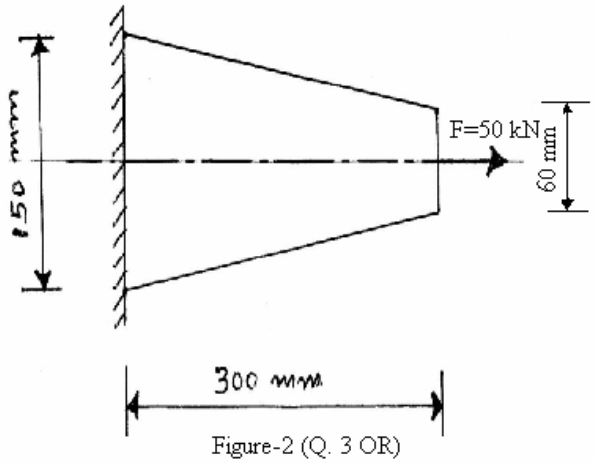

Figure-2 (Q. 3 OR)

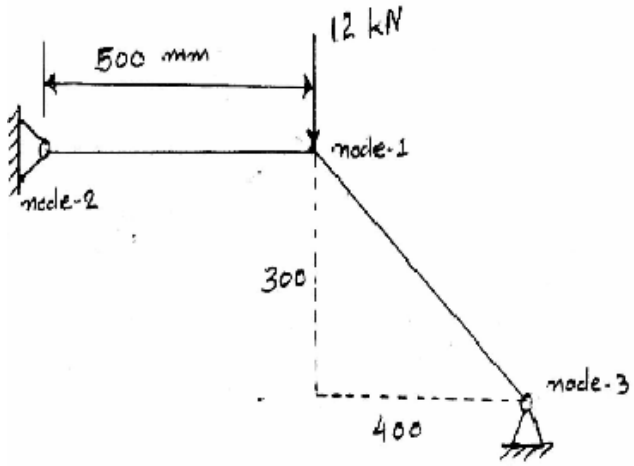

Figure-3 (Q. 4 OR)

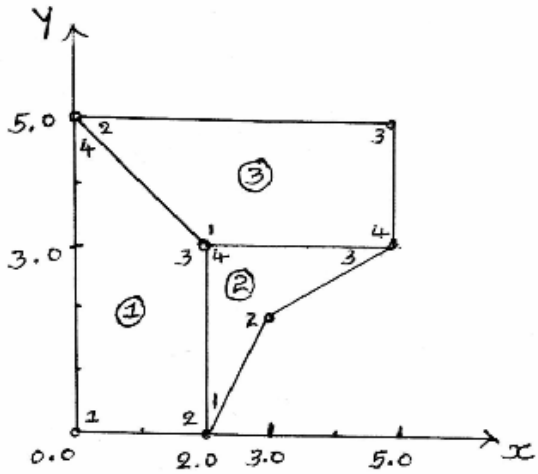

Figure-4 (Q.5 (b) OR)

****