Seat No.: _____ Enrolment No._____

GUJARAT TECHNOLOGICAL UNIVERSITY

ME Semester –II Examination Dec. - 2011

Subject code: 1720906 **Date: 16/12/2011**
Subject Name: Robotics
Time: 02.30 pm – 05.00 pm **Total Marks: 70**

Instructions:

1. **Attempt all questions.**
2. **Make suitable assumptions wherever necessary.**
3. **Figures to the right indicate full marks.**

Q.1 **(a)** Classify the robot end effectors and describe in brief. **06**

(b) Find the rigid body transformation which takes the points (0, 0, 0), (1, 0, 0) and (0, 1, 0) respectively to:- **08**

i. (2, 0, 0), (3, 0, 0) and (2, 0, 1)
ii. (0, 0, 0), (0, 1, 0) and (-1, 0, 0)
iii. (0, 0, 1), (0, 1, 1) and (-1, 0, 1)

Q.2 **(a)** Give Euler's angle representation for the rotation of arm and gripper. **07**

(b) Describe types of actuators used for robotic manipulators. **07**

OR

(b) Describe safety measures are to be taken in robotic system. **07**

Q.3 **(a)** Classify the sensors used in mobile robotics applications **06**

(b) A single-link robot with a rotary joint is motionless at θ = 15 degrees. It is desired to move the joint in a smooth manner to θ = 75 degrees in 3 seconds. Find the coefficients of a cubic that accomplishes this motion and brings the manipulator to rest at the goal. **08**

OR

Q.3 **(a)** Find the inertia tensor for the rectangular body of uniform density p with respect to the coordinate system shown in Figure 1. **08**

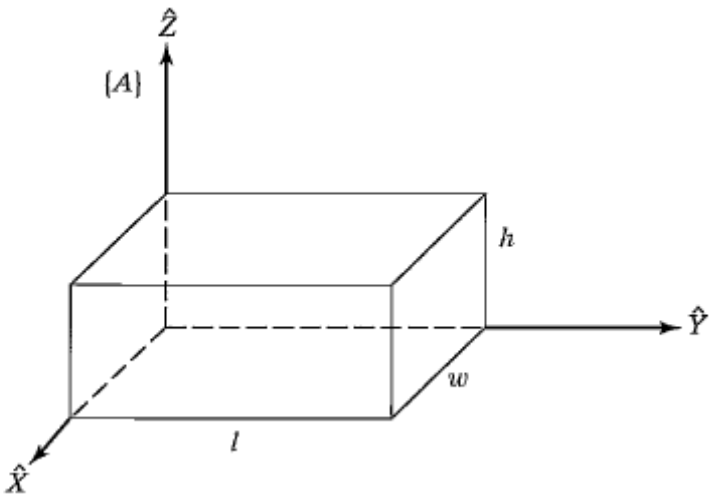

Figure 1

(b) Explain Robot centered compliance device in detail. **06**

Q.4 **(a)** Give advantages and disadvantages of the different sensors used in robotic system. **04**

(b) Give D-H Representation for PUMA 560 robot (Figure. 2) and derive kinematic equation for it. **10**

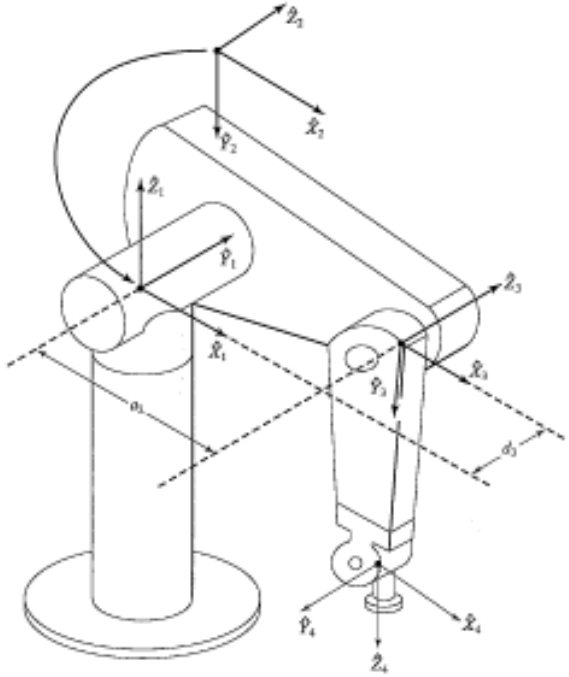

Figure 2

OR

Q.4 **(a)** Describe different programming methods of robots. **07**

(b) A single cubic trajectory is given by $\theta(t) = 10 + 90t^2 - 60t^3$ and is used over the time interval from t = 0 to t = 1. What are the starting and final positions, velocities, and accelerations? **07**

Q.5 **(a)** What is requirement of Force sensors in robotics? Describe any one type of force sensor. **07**

(b) Derive generalize expression for equivalent rotation matrix. **07**

OR

Q.5 **(a)** Describe Link parameters and joint parameters. **07**

(b) Define and describe calibration, coordinated motion, and automatic scheduling. **07**

****