Seat No.: _____ Enrolment No._____

GUJARAT TECHNOLOGICAL UNIVERSITY

ME Semester –I Examination Feb. - 2012

Subject code: 711401N **Date: 11/02/2012**
Subject Name: Construction Management
Time: 10.30 am – 01.00 pm **Total Marks: 70**

Instructions:

1. **Attempt all questions.**
2. **Make suitable assumptions wherever necessary.**
3. **Figures to the right indicate full marks.**

Q.1 **(a)** Explain in brief the difference between PERT and CPM networks. Explain the circumstances under which one is preferred over the other. **07**

(b) Discuss objectives & functions of construction management. **07**

Q.2 **(a)** From the data given below in table, prepare network diagram and compute activity times, total float, free float and interfering float. Locate the critical path for network of the project. **07**

Activity	Duration (Days)
A (1-2)	8
B (1-3)	6
C (1-4)	10
D (2-5)	8
E (2-7)	15
F (3-5)	10
G (4-5)	8
H (4-6)	10
I (5-6)	10
J (5-7)	10
K (6-7)	8
L (7-8)	7

(b) What is work-breakdown structure? Prepare work-breakdown structure for a Trimix road project of a township. **07**

OR

(b) A network for a project shown in figure. The network is to be updated after 10 days of its execution. The following conditions exist at the end of 10 days: **07**

a. Activity 1-2, 1-3 and 1-4 have been completed as originally scheduled.
b. Activity 4-5 is in progress and will require 6 more days for its completion
c. Activity 4-6 is in progress and will require 6 more days for its completion.
d. Activity 3-6 is in progress and will be completed in one day.
e. Other activities have not been commenced and their original predicted durations will hold good, except for activity 5-7 which will require only three days instead of 5 days originally planned.

Update the network and determine the critical path of the updated network. What is the total increase in the project duration?

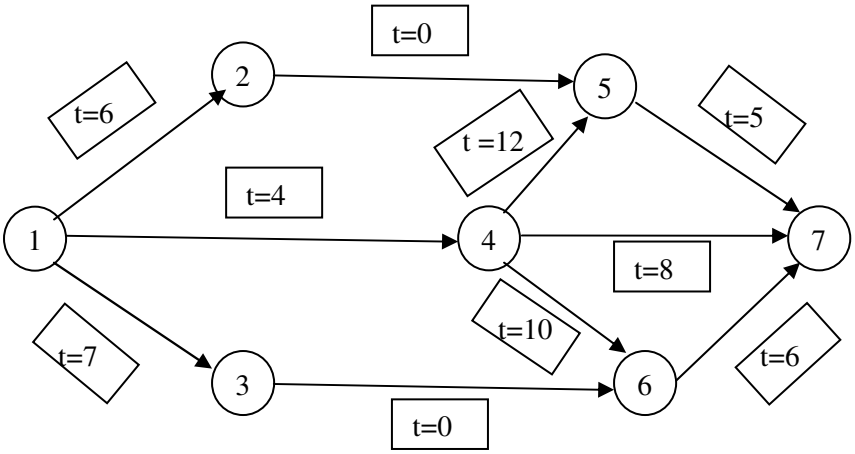

Q.3	**(a)**	Discuss on project management software.	**07**
	(b)	Write short note on role of construction managers.	**07**
		OR	
Q.3	**(a)**	Write short note on progress management techniques.	**07**
	(b)	What are the purposes of cash flow analysis and expenditure schedules? How is it determined?	**07**
Q.4	**(a)**	Explain line of balance techniques. Enumerate the steps taken in scheduling with LOB and how is it advantageous in construction field? Explain briefly.	**07**
	(b)	Write short note on salient features of a construction project.	**07**
		OR	
Q.4	**(a)**	What is the difference between CPM and PNA? Explain : Cost variance, schedule variance, cost performance index and schedule performance index.	**07**
	(b)	Explain effects of various parameters affecting planning of construction industries.	**07**
Q.5	**(a)**	What do you understand by updating? Why is it essential? In which conditions, the updating is required?	**07**
	(b)	Discuss in brief the resources allocation problem. What are the methods of solving the problem?	**07**
		OR	
Q.5	**(a)**	Write short note on time and motion study work measurement of construction activity.	**07**
	(b)	Explain following terms: Precedence networks, GERT, Work Study, Cash flow analysis, decision tree, Resource smoothening, Resource levelling.	**07**

****