Seat No.: _____ **Enrolment No._____**

GUJARAT TECHNOLOGICAL UNIVERSITY

ME Semester –I Examination Feb. - 2012

Subject code: 711603N **Date: 17/02/2012**
Subject Name: Computerized Process Control
Time: 10.30 am – 01.00 pm **Total Marks: 70**

Instructions:

1. **Attempt all questions.**
2. **Make suitable assumptions wherever necessary.**
3. **Figures to the right indicate full marks.**

Q.1 (a) Discuss & Compare the Non- interacting v/s Interacting Two tank multi capacity control System. 07

(b) Describe the temperature control aspects in a CSTR and transfer function for CSTR (Continuous Stirred Tank Reactor). 07

Q.2 (a) Explain the aims of Plant automation & discuss the benefits of Plant automation. 07

(b) Explain the basic concepts of measurement and discuss the generalized measurement system. 07

OR

(b) Define transducer & explain the advantages and disadvantages of Electrical Transducer. 07

Q.3 (a) Discuss the process control requirements of Computers. 07

(b) Explain & discuss the communication in DCS system and describe about Token Bus communication Topology. 07

OR

Q.3 (a) Explain Distributed Computer Control System with a block diagram and Discuss its advantages & disadvantages. 07

(b) Explain & discuss the Peak value search & tracing. 07

Q.4 (a) Determine the overall function C(s)/ R(s) for the system shown in figure. 07

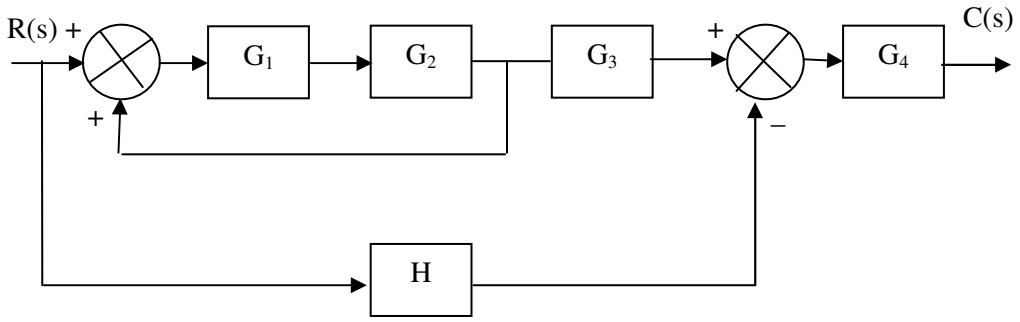

(b) Describe with a diagram, the Temperature Control system for Plastic Injection Molding process. 07

OR

Q.4 (a) Write a note about (i) Analog to Digital Convertor (ii) Microcontrollers. 07

(b) Explain with a block diagram, the computer control of a Fed-batch Fermentor. 07

Q.5 (a) Explain the Root-Locus method in brief. Sketch the root-locus diagram for the system having open-loop transfer function 10

$$G(s) = \frac{K_C(6s+1)}{s(s+3)(s+4)}$$

Indicate all poles, Zero, Center of gravity, Breakaway point, direction where loci travels. Determine the value of K_C for which the system becomes just unstable.

(b) Comparison of Pneumatic and Electronic Controllers. 04

OR

Q.5 (a) Explain DDC and discuss the backup concept of DDC with diagram. 07

(b) Write about the developments in intelligent semiconductor sensors & fiber-optic sensors. 07

****