Seat No.: _____ **Enrolment No._____**

GUJARAT TECHNOLOGICAL UNIVERSITY

ME Semester –I Examination Feb. - 2012

Subject code: 712805N **Date: 21/02/2012**
Subject Name: Design of Machine Tools
Time: 10.30 am – 01.00 pm **Total Marks: 70**

Instructions:

1. **Attempt all questions.**
2. **Make suitable assumptions wherever necessary.**
3. **Figures to the right indicate full marks.**

Q.1 **(a)** Explain the important requirements of modern machine tools. **07**

(b) Why is geometric progression preferred over arithmetic and harmonic progression in the design of multi-stage gear box? **07**

Q.2 **(a)** Explain basic considerations in design of machine tool drives. **07**

(b) Draw the structural and speed diagram for a gear box having operating speed range from 56 rpm to 1000 rpm. Use R4 series, with standard spindle speeds. The gear box is connected to motor driven by a pair of pulleys. Assume the motor speed to be 1440 rpm. Draw the gear box layout diagram. **07**

OR

(b) Explain various methods for speed changing in all geared drives. **07**

Q.3 **(a)** Explain functions and requirements of machine tool structures. **07**

(b) During turning a 200 mm diameter job in a lathe machine, the following cutting forces act as shown in figure 3.1. **07**
Calculate the force depositions at the headstock and tailstock centers. Neglect the weight of work piece.

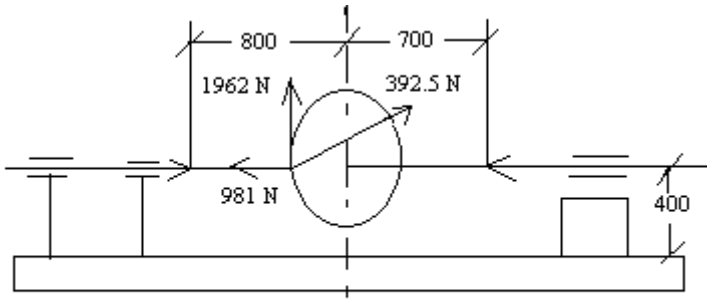

All dimension are in mm

Figure 3.1

OR

Q.3 **(a)** Explain the functions of bed. How the rigidity of bed can be improved? **07**

(b) Discuss the importance of following terms on design of the machine tools; i) Rigidity, ii) Productivity, iii) Accuracy, & iv) Reliability. **07**

Q.4 **(a)** Explain the classification of guide ways used in machine tools. **07**

(b) Design a guide way dimensions for a total load of 500 Kg. The slide is moving with a traverse rate (v) of 3 m/min. The viscosity of the **07**

lubricant is 0.01 Kg sec/m^2. The permissible pressure is 2 Kg/cm^2. The minimum film thickness (h_o) can be taken as 0.01 mm.

OR

Q.4 **(a)** Explain the functional requirements of a spindle unit in machine tools. **07**

(b) Design a spindle for following dimensions, refer figure 4.1. **07**
Spindle has maximum power consumption 4 KW and speed 750 rpm.

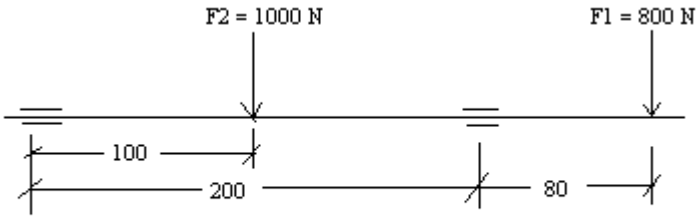

All dimensions are in mm

Figure 4.1

Q.5 **(a)** Discuss the various acceptance tests for machine tools. **07**

(b) Discuss shape and profile of machine tool slide ways with their merits and demerits. **07**

OR

Q.5 **(a)** List and briefly explain sources of different types of forces acting on the machine tools. **07**

(b) What are the different sources of vibrations in machine tools? How that can be eliminated? **07**

****