Seat No.: _____ **Enrolment No._____**

GUJARAT TECHNOLOGICAL UNIVERSITY

ME Semester –I Examination Feb. - 2012

Subject code: 714403 **Date: 21/02/2012**

Subject Name: Modern Digital Communication Techniques

Time: 10.30 am – 01.00 pm **Total Marks: 70**

Instructions:

1. **Attempt all questions.**
2. **Make suitable assumptions wherever necessary.**
3. **Figures to the right indicate full marks.**

Q.1 **(a)** Consider a binary, zero mean Markov source characterized by **07**

$$P_r = \{a_{n+1} \neq a_n\} = P_t$$
$$P_r = \{a_{n+1} = a_n\} = 1 - P_t$$

The autocorrelation function for such a source is given by

$$R_a(l) = (1 - 2P_t)^{|l|}$$

a) Find expression of Power Spectral Density

b) Find expression of PSD, if the resulting sequence is Cyclostationary with correlation function

$$R_a(n\,;\,l) = (1 - 2Pt_n)^{|l|/N}\ ;\ l = 0, \pm N, \pm 2N, \ldots$$

(b) Draw block diagram of a simplified Digital Communication System and Discuss the various elements and design parameters of a link are examined and unified in the link budget equation. **07**

Q.2 **(a)** Define Power Spectral Density and Discuss the PSD of Continuous Phase Modulation. **07**

(b) Explain the Viterbi algorithm for the Discrete Time White Noise Filter Model and Draw Tree diagram for Viterbi decoding of the duobinary pulse. **07**

OR

(b) The modulated wave form shown in Fig. 1 **07**

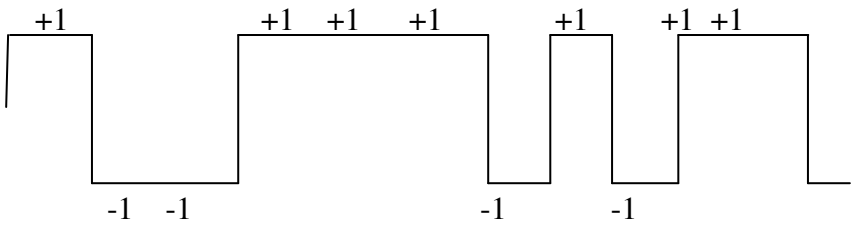

Fig. 1: Modulated wave form

can be written in the form as

$$s(t) = \sum b[n]*p(t - nT)\ ;\ -\infty \leq n \leq +\infty$$

Where the bits b[n] take the values ±1, and p(t) is a rectangular pulse.

Compute the PSD and Show that it scales as the magnitude squared of the spectrum of the modulating pulse.

Q.3 **(a)** Explain Performance characteristics of the MSE Equalizer and show that a linear equalizer yields good performance on channels such as telephone lines, where spectral characteristics of the channels are well behaved and do not exhibit spectral null. **07**

(b) Explain time domain and frequency domain characteristics of duobinary pulse and compare with modified duobinary pulse. **07**

OR

Q.3 **(a)** State and prove Nyquist condition for zero ISI. What are the Practical difficulties of Nyquist theorem? **07**

(b) A wire line channel of length 1000 km is used to transmit data by means of binary PAM. Regenerative repeaters are spaced by 50 km apart along the system. Each segment of the channel has an ideal (constant) frequency response over the frequency band $0 \leq f \leq 1200$ Hz and an attenuation of 1 dB/km. The channel noise is AWGN. **07**

a) What is the highest bit rate that can be transmitted without ISI?

b) Determine the required E_b/N_0 to achieve a bit error of $P_2 = 10^{-7}$ for each repeater.

c) Determine the transmitted power at each repeater to achieve the desired E_b/N_0. Where $N_0 = 4.1 \times 10^{-21}$ W/Hz.

Q.4 **(a)** State Shannon's Channel coding theorem. Derived equation of infinite bandwidth Shannon information transport limits (I_∞) and show that Channel capacity C in bits/sec increase monotonically toward its maximum value C_∞ as B increases. **07**

(b) $X_1, X_2, X_3, \ldots, X_N$ are a set of N statistically independent and identically distributed real Gaussian random variables with moments $E(X_i) = m$ and variance $Var(X_i) = \sigma^2$. **07**

a) Define

$$U = \sum X_n \text{ ; where } 1 \leq n \leq N.$$

Evaluate the SNR of U, which is defined as

$$(SNR)_U = [\, E(U) \,]^2 / 2\sigma_U^2$$

b) Define

$$V = \sum X_n^2 \text{ ; where } 1 \leq n \leq N.$$

Evaluate the SNR of V, which is defined as

$$(SNR)_V = [\, E(V) \,]^2 / 2\sigma_V^2$$

c) Plot $(SNR)_U$ and $(SNR)_v$ versus m^2 / σ^2 for N = 5.

OR

Q.4 **(a)** List out applications of Direct Sequence Spread Spectrum Signals and explain any one. **07**

(b) Given rate 1/2 convolution encoder with K=3 illustrate in fig. 2. Draw the state diagram and Tree diagram. **07**

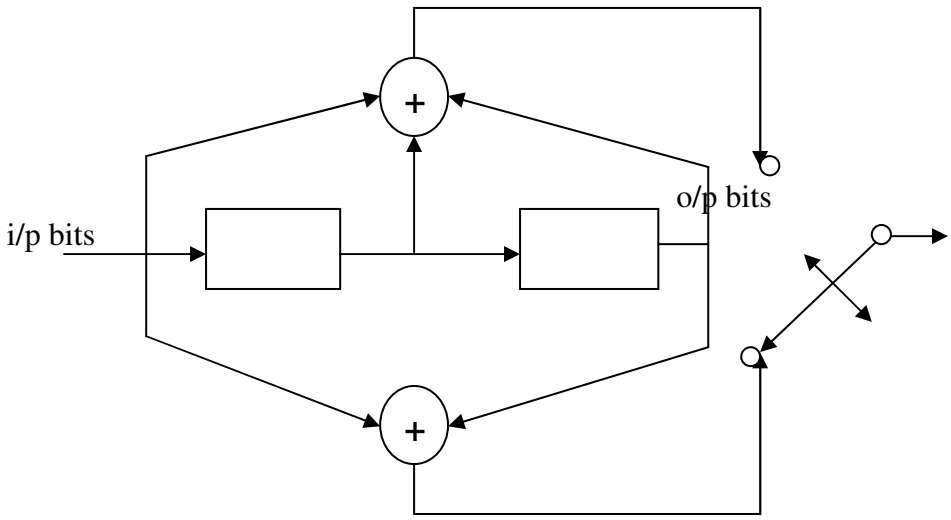

Fig. 2: K = 3 and r = 1/2, convolution encoder.

Q.5 **(a)** List out the Fundamental Parameters of a Coded Digital Communication System and explain special types of Binary Block Codes. **07**

(b) Draw the block diagram of Delay locked loop (DLL) for PN code tracking and compare with Tau dither loop (TDL). Demonstrate autocorrelation function and tracking error signal for DLL. **07**

OR

Q.5 **(a)** What are the advantages of Multicarrier System? Explain an FFT based Multicarrier System. **07**

(b) A slow FH binary FSK system with noncoherent detection operates at $E_b/J_o = 10$, with a hopping bandwidth of 2 GHz, and a bit rate of 10 kbps. **07**

a) What is the processing gain for the system?

b) If the jammer operates as a partial band jammer, what is the bandwidth occupancy for worst case jamming?

c) What is the probability of error for the worst case partial band jammer?

****