Seat No.: _____ **Enrolment No._____**

GUJARAT TECHNOLOGICAL UNIVERSITY

ME Semester –III Examination Dec. - 2011

Subject code: 732002 **Date: 08/12/2011**

Subject Name: Design of Earthquake Resistant Structures

Time: 10.30 am – 01.00 pm **Total Marks: 70**

Instructions:

1. **Attempt all questions.**
2. **Make suitable assumptions wherever necessary.**
3. **Figures to the right indicate full marks.**
4. **Assume concrete grader M20 & Fe 415 steel grade unless otherwise mentioned.**
5. **Use of IS:1893, IS:4326, IS:13920, IS:456 and SP:16 is permitted in exam hall provided they do not contain anything other then the printed matter inside.**

Q.1 **(a)** Explain the following in Earthquake Engineering **09**

1) Provisions in IS-1893-2002 for design of vertical projections beyond building.
2) Accidental eccentricity
3) Capacity Design Concept in Ductile Detailing

(b) Describe the various types of dampers used for improvement of seismic performance of buildings. **05**

Q.2 **(a)** Explain Design Spectrum, Elastic Response Spectrum, Inelastic Response Spectrum. **07**

(b) List all the load combinations to be considered for a building with orthogonal moment resisting frames, if all three directions of earthquake load are considered and wind load is neglected. **07**

OR

(b) A cantilever beam in the building has a span of 2 meters, dead load udl of 40 kN/mt, live load udl of 15 kN/mt, a concentrated load of 30 kN at free end due to dead load. Calculate the design bending moment at support of beam considering vertical EQ force only, if the building is on medium soil in Ahmedabad for Offices, has a live load of 3.5 kN/sqmt. **07**

Q.3 Figure shows the layout & section a building. **14**

- ⇨ Assume Slab thickness = 130 mm, Floor finish = 1.0 KN/m^2 throughout.
- ⇨ All beams have size 230 mm x 460 mm (including slab)
- ⇨ 230 mm thick full height brick masonry wall around outer periphery of building in first floor, No walls in ground floor and 230 mm thick 0.9 m high brick masonry wall around outer periphery of building at roof level.
- ⇨ All Circular Columns of 400 mm diameter and All Rectangular Columns of 300 x 460 mm size.
- ⇨ The building has SMRF and is meant for a hospital in Vadodara with medium soil at foundation level.

Calculate the Base shear and shear force at roof level if EQ acts along X direction.

OR

Q.3 Refer Figure 1, consider data as above, assume storey shear at roof level as 50 kN, and Calculate the Joint loads on each frame at that level due to EQ in Y direction. **14**

Q.4 Main Steel provided in various beams (as shown in Figure 1) is as follows : **14**

Beam No.	Continuous Top Bars	Extra Top Bars on Left	Extra Top Bars on Right	Continuous Bottom Bars
B_{01}	2-16 dia.	2-20 dia.	3-20 dia.	3-20 dia.
B_{02}	2-16 dia.	3-20 dia.	2-20 dia.	3-20 dia.
B_{03}	2-16 dia.	2-20 dia.	2-20 dia.	4-20 dia.
B_{04}	2-16 dia.	2-20 dia.	2-20 dia.	3-20 dia.
B_{05}	2-12 dia.	2-20 dia.	2-20 dia.	4-16 dia.

Design Shear reinforcement in Beam B03 if DL udl on beam is 36 KN/m and LL udl on beam is 12 KN/m. Use 8 mm dia. 2 legged stirrups.

OR

Q.4 Refer Figure 1, consider data as above and Check the safety of column in intermediate storey at location A-2, if it carries factored axial load of 1000 KN and main steel provided is 10 nos. 20 diameter tor steel bars. (check only main steel and assume stirrups as suitably provided.) **14**

Q.5 A shear wall 180 mm thick, with boundary elements 400 X 400 mm each (at 2500 mm center to center) is subjected to axial force Pu = 1600 kN, bending moment Mu = 4000 kNm, and shear force Vu = 1500 kN. Design the reinforcement in the wall and main steel in boundary elements. **14**

OR

Q.5 Describe the methods of Retrofitting of RCC Beam and Footing in a framed structure building and Retrofitting of a Masonry Building. Draw suitable sketches to explain. **14**

****

Figure – 1

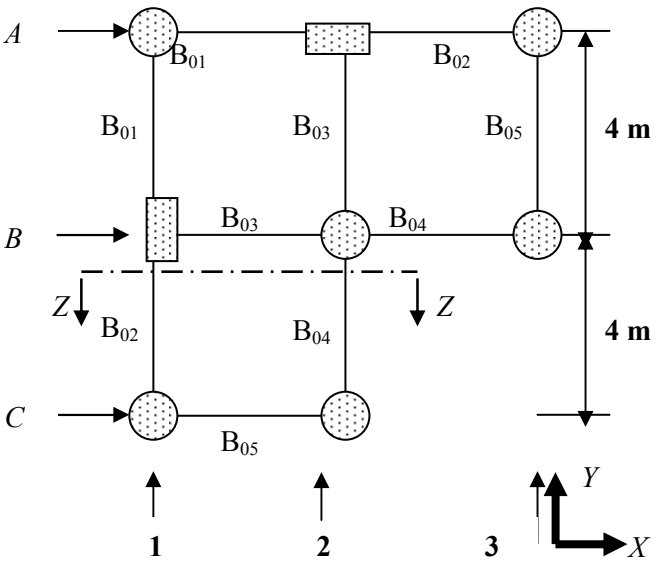

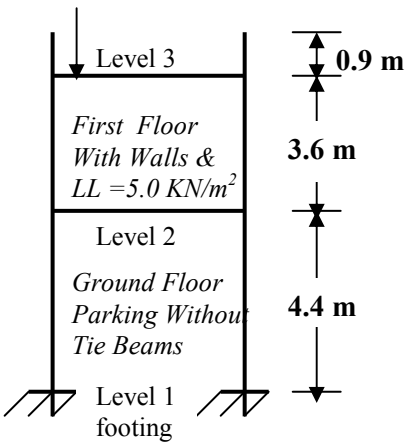

Section ZZ