Seat No.: _____ Enrolment No._____

GUJARAT TECHNOLOGICAL UNIVERSITY

ME – SEMESTER II (OLD) EXAMINATION – SUMMER 2017

Subject Code : 1720302 **Date:10/05/2017**

Subject Name: Advance Instrumentation

Time:10:30 A.M. to 01:00 P.M. **Total Marks: 70**

Instructions:

1. **Attempt all questions.**
2. **Make suitable assumptions wherever necessary and mention it clearly in your solution.**
3. **Figures to the right indicate full marks.**
4. **Draw all necessary circuit diagrams in your solution.**
5. **All symbols carry their usual meanings.**
6. **Show all node voltages and currents used in circuit diagram of your solution.**

Q.1 For the circuit shown in following figure derive the equation of feedback factor β. **14**

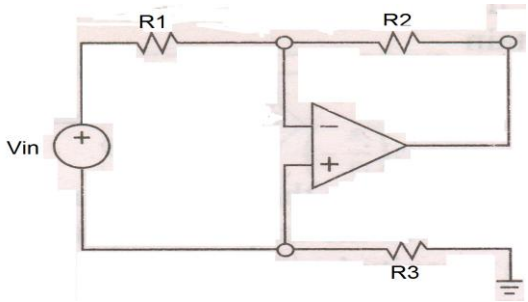

Consider R1=30kΩ, R2=20kΩ, R3=10kΩ, r_d=150kΩ, and r_o=75Ω, evaluate the feedback factor β.

Q.2 **(a)** What do you mean by loading effect? With the help of circuit diagram and equations explain the loading effect in voltage amplifier. Explain your point considering suitable values of resistors and parameters. **07**

(b) Design a variable source having the range -10V ≤ Vs ≤ 10V using a 741 op-amp and a 100 kΩ potentiometer. What is the need of op-amp in this design? If Vs is set to 5V how much does it change when we connect a 1 kΩ load to the source? **07**

OR

(b) Derive the equations of A_{dm}, A_{cm}, and $CMRR_{dB}$ for difference amplifier shown in following figure. **07**

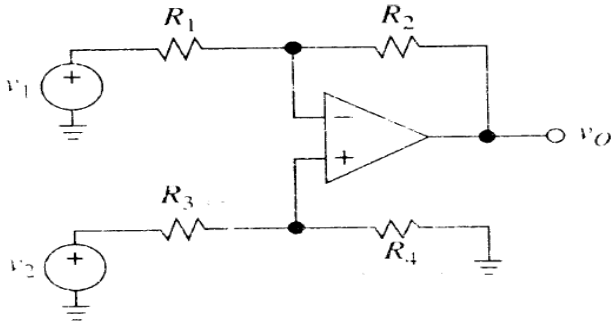

Q.3 Strain gauge bridge is cascaded by instrumentation amplifier of gain A. Strain gauges are mounted in all four arms of the bridge. It has calibration facility against reference voltage (V_{REF}) and strain gauge tolerances. Draw the circuit diagram showing all components and derive the equation of output voltage v_o from instrumentation amplifier. What is the advantage of using strain gauges in all four arms? **14**

Let the strain gauge in your design be 100 ± 1% types. Limit maximum current through strain gauges to 15 mA to avoid excessive self heating. Assume V_{REF} = 10V ± 5%. Specify suitable values for resistors connected for calibration purposes. Outline the calibration procedure.

OR

Q.3 Derive the equations for ideal gain and actual gain of the circuit shown in following figure. Consider R_1 = 1 MΩ, R_2 = 1 MΩ, R_3 = 100 kΩ, R_4 = 1 kΩ, and R_L = 2kΩ, evaluate ideal and actual gain considering r_d = 1 MΩ, a = 10^5 V/V, and r_0 = 75 Ω. **14**

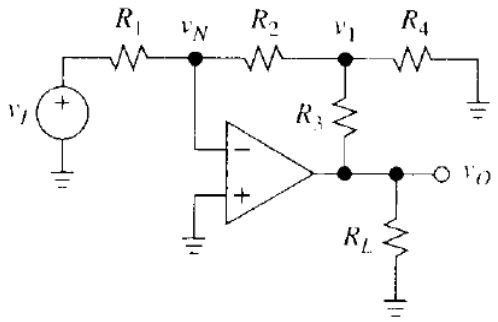

Q.4 **(a)** With the help of circuit diagram and frequency response discuss the limitation of differentiator circuit and provide solution for the same. **07**

(b) List important features of switched capacitor filters. Discuss its practical limitations in detail. **07**

OR

Q.4 **(a)** Define input bias and input offset currents. What are their typical valued for 741 op-amp? Derive the equation of error voltage generated due to input bias and input offset currents. Give your suggestion to reduce the error voltage. **07**

(b) Explain the effect of finite gain bandwidth product on integrator circuits with the help of diagrams and equations. **07**

Q.5 **(a)** Draw the circuit diagram of second order band-pass KRC filter and derive equations for dc gain, and $\omega 0$. Design a filter with f_0 = 1000 Hz and bandwidth of 200 Hz. What is its resonance gain? **07**

(b) With the help of circuit diagrams, equations and Bode plot describe any two first-order active filters. **07**

OR

Q.5 **(a)** Explain noise power density, spectral noise density, and white noise in detail. **07**

(b) The difference amplifier of following figure uses a 741 opamp having CMRR of 90 dB and perfectly matched resistances R1=15kΩ and R2=150kΩ. If the inputs are tied together and driven with a common signal v_I (i.e $v_1 = v_2 = v_I$) then estimate the typical change in v_o if (i) v_I is slowly changed from 0 to 10V and (ii) v_I is a 10 kHz, 10 V peak to peak sine wave. Consider CMRR at 10 kHz of 57 dB. **07**

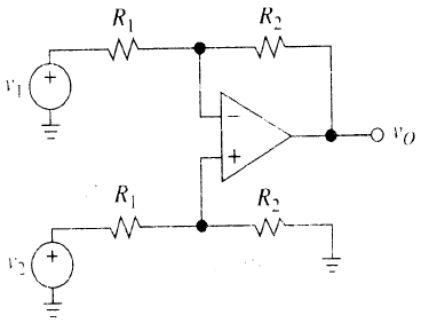

****